368-2026

CERTIFIED COPY OF ORDER

July Session of the July Adjourned 26

STATE OF MISSOURI } **ea.** **Term. 20**

County of Boone

In the County Commission of said county, on the 28th **day of** July **20** 26

the following, among other proceedings, were had, viz:

Now on this day, the County Commission of the County of Boone does hereby receive and accept the plats, items A and B, as listed in the attached consent agenda (Attachment A), and authorizes the Clerk to insert the associated staff reports into the minutes of this meeting.

Attachment A:

A. Akmore Subdivision. A-2. S29-T50N-R13W. Tim & Susie Akins Family Trust, owner. Don Bormann, surveyor. Perche Township.

B. Douglas Highway 124 Plat 1. A-2. S16&17-T50N-R12W. Larry Douglas & Ruth Ann Douglas Trusts, owners. James Patchett, surveyor. Rocky Fork Township.

Done this 28th day of July 2026.

Kip Kendrick
Presiding Commissioner

Justin Aldred
District I Commissioner

Janet M. Thompson
District II Commissioner

ATTEST:

Brianna L. Lennon SEO
Brianna L. Lennon
Clerk of the County Commission

Staff Report for County Commission
RE: P&Z Agenda Items
July 28, 2026

The Planning and Zoning Commission reviewed Agenda Items 1A & 2 at its July 16, 2026, meeting. The minutes of that meeting and the Boone County Zoning and Subdivision Regulations are incorporated into the record of this meeting. Item 1B was approved by P&Z by consent for the May 21 2026 meeting and was waiting for infrastructure installation which has now been completed.

1. Consent Agenda – Final Plats

Regarding the Consent Agenda, Items A & B, these were approved by consent and are presented for your receipt and acceptance. I request that you waive the reading of the staff reports and authorize the Clerk to insert them into the minutes of this meeting as if read verbatim.

A. Akmore Subdivision. A-2. S29-T50N-R13W. Tim & Susie Akins Family Trust, owner. Don Bormann, surveyor. Perche Township.

The property is located along State Route YY, approximately less than a quarter of a mile north of the intersection of W Red Rock Road and State Route YY. The proposal is to create a single 7.98-acre lot containing a single-family dwelling, accessory shed, and an onsite wastewater lagoon. The 30.94-acre parent is comprised of two tracts each of which is currently considered a legal lot of record, with the proposed lot being created out of a portion of each of the existing tracts. The property is zoned Agriculture 2 (A-2) and is surrounded by A-2 zoning on all sides.

The property has frontage along State Route YY, a publicly maintained roadway. An existing driveway provides access to the public road. The applicant has not submitted a written request from the traffic study requirement. Approval of the plat is unlikely to impact existing transportation resources. Waiver of the traffic study requirement is appropriate in this case.

Consolidated Water provides water service. Boone Electric provides power. The Boone County Fire Protection District provides fire protection. The nearest station, Station 4, is approximately 6 miles away.

The property utilizes an onsite wastewater lagoon to serve the existing property. The applicant has not submitted a waiver from the sewer cost benefit analysis. No public sanitary sewer system is available nearby. Creation of a one lot minor plat is unlikely to be feasible in the creation of a new public sewer system. Granting a waiver from the sewer cost benefit analysis is appropriate in this case.

Both remainder tracts after the subdivision of the 7.98-acre tract will result in tracts sized less than 20 acres each. The applicant has proposed a Trustee's Deed to combine the remainder of both tracts into a 20 acre plus single tract. The new deed must be recorded concurrent to the subdivision plat to be compliant with the subdivision regulations.

The property scored 28 points on the rating system

Staff recommended approval of the plat and granting of waivers with the following condition:

1. A corresponding deed with an updated legal description that describes the remainder of both parent tracts as a single legal tract is submitted for review and subject to the satisfaction of the Director of Resource Management. The corresponding deed must be recorded concurrent to the recording of Akmore Subdivision.

B. Douglas Highway 124 Plat 1. A-2. S16&17-T50N-R12W. Larry Douglas & Ruth Ann Douglas Trusts, owner. James Patchett, surveyor. Rocky Fork Township.

The property lies on the south side of Highway 124, west of Hallsville, between Robinson Road and Caldwell Road. The property is 44.82 acres in size and zoned Agriculture-2 (A-2). This proposal creates seven lots, all with frontage on Highway 124. On lot 7, there is a house, a shop, and several sheds. On lot 5, there is a shed in the southeastern corner. The other five lots are undeveloped.

The property was rezoned to Agriculture-2 (A-2) on the March 2026 agenda to allow for this development.

All lots either have (in the case of lot 7) or will have direct access on to Highway 124, a publicly dedicated, publicly maintained road. Driveways will be permitted by the Missouri Department of Transportation. The applicant has requested to waive the traffic study requirement.

The subject property is located in Public Water Supply District #4. Fire hydrants will be required to be installed at 500' intervals.

On-site wastewater treatment systems are proposed for the seven lots, with lot 7 having an existing on-site system. The applicant has submitted soils data for consideration and review as part of this proposal. The applicant has also submitted a request to waive the cost-benefit analysis for comparing providing central public sewer.

The property scored 38 points on the rating system.

Staff recommended approval of the plat and granting the requested waivers.

369-2026

CERTIFIED COPY OF ORDER

July Session of the July Adjourned 26

STATE OF MISSOURI } **ea.** **Term. 20**

County of Boone

In the County Commission of said county, on the 28th **day of** July **20** 26

the following, among other proceedings, were had, viz:

Now on this day the County Commission of the County of Boone does hereby approve the Contract Amendment for Funding for Shelters for Victims of Domestic Violence between Boone County and True North of Columbia, Inc. It is further ordered the Presiding Commissioner is hereby authorized to sign said Contract Amendment.

Done this 28th day of July 2026.

Kip Kendrick
Presiding Commissioner

Justin Aldred
District I Commissioner

Janet M. Thompson
District II Commissioner

ATTEST:

Brianna L. Lennon SEU
Brianna L. Lennon
Clerk of the County Commission

Boone County Community Services Department

Memorandum

TO: Boone County Commission

FROM: Kristin Cummins, Deputy Director

DATE: July 16, 2026

RE: First Reading: Contract Amendment 1 for 2026 Funding for Shelters for Victims of Domestic Violence for True North of Columbia, Inc. contract

The Community Services Department requests approval for a contract amendment for the 2026 Funding for Shelters for Victims of Domestic Violence with True North of Columbia, Inc. The original contract was approved in Boone County Commission Order 006-2026, dated January 6, 2026 which approved a total funding amount of $37,120 to True North of Columbia, Inc. The Community Services Department recently learned that the budgeted and approved amount for 2026 funding was miscalculated. The contract amendment will reduce the total contract amount to $25,145.00 and adjust the second 2026 payment accordingly in accordance with the Non-Appropriation Clause of the contract set out in Section XIII.

c: Contract File

Docusign Envelope ID: 1DC1FB15-6292-8349-8342-702BD22656BC

Commission Order #: 369-2026 Date: 07/28/2026

CONTRACT AMENDMENT NUMBER ONE
True North of Columbia, Inc.
Funding for Shelters for Victims of Domestic Violence

The Agreement, approved in Boone County Commission Order 006-2026, dated January 6, 2026 made by and between Boone County, Missouri, a political subdivision of the State of Missouri through the Boone County Commission, and **True North of Columbia, Inc.** for and in consideration of the performance of the respective obligations of the parties set forth herein, is amended as follows:

1. Reduce to the contract amount to $25,145.00 from $37,120 due to a miscalculation of the cash balance available in the Boone County Domestic Violence Account (and adjust the second 2026 payment accordingly) in accordance with the Non-Appropriation Clause of the contract set out in Section XIII.

2. Except as specifically amended hereunder, all other terms, conditions and provisions of the original agreement shall remain in full force and effect.

IN WITNESS WHEREOF the parties through their duly authorized representatives have executed this agreement on the day and year first above written.

True North of Columbia, Inc.

DocuSigned by:
By: Michele Snodderley
EF9D341F3E5F401...
Signature

By: Michele Snodderley
Printed Name/Title

Boone County, Missouri
By: Boone County Commission

Signed by:
Kip Kendrick
2B83ECDD7F6E4A6...
Kip Kendrick
Boone County Presiding Commissioner

APPROVED AS TO FORM:

DocuSigned by:
7D71DEAEB9D74DD...
CJ Dykhouse, County Counselor

ATTEST:

Signed by:
Brianna L. Lennon
242B827B32F14BF...
Brianna L. Lennon, County Clerk

AUDITOR CERTIFICATION: In accordance with RSMo. §50.660, I hereby certify that a sufficient unencumbered appropriation balance exists and is available to satisfy the obligation(s) arising from this contract. (Note: Certification of this contract is not required if the terms of this contract do not create a measurable county obligation at this time.)

DocuSigned by:
Kyle Rieman
by JS
E0B0F2FB0CE34B4...
Signature

7/16/2026
Date

2030/86900/No Additional Appropriation)
Appropriation Account

370-2026

CERTIFIED COPY OF ORDER

July Session of the July Adjourned 26

STATE OF MISSOURI } **ea.** **Term. 20**

County of Boone

In the County Commission of said county, on the 28th **day of** July **20** 26

the following, among other proceedings, were had, viz:

Now on this day the County Commission of the County of Boone does hereby approve the attached Budget Revision to Move Budget from Class 9 to 2 & 7.

Done this 28th day of July 2026.

Kip Kendrick
Presiding Commissioner

Justin Aldred
District I Commissioner

Janet M. Thompson
District II Commissioner

ATTEST:

Brianna L Lennon SEU
Brianna L. Lennon
Clerk of the County Commission

BOONE COUNTY, MISSOURI
REQUEST FOR BUDGET REVISION

7/17/26
EFFECTIVE DATE

FOR AUDITORS USE

Dept	Account	Fund/Dept Name	Account Name	(Use whole $ amounts) Transfer From Decrease	Transfer To Increase
1251	23810	GF Sheriff Operations	Untagged Hardware & Software		185
1251	71100	GF Sheriff Operations	Outsourced Services		74,700
1251	23850	GF Sheriff Operations	Untagged Equipment & Tools		22,020
1251	23860	GF Sheriff Operations	Vehicle Equipment <$1,000		2,458
1251	92300	GF Sheriff Operations	Replcment Mach & Equip	99,363	
				99,363	**99,363**

Describe the circumstances requiring this Budget Revision. Please address any budgetary impact for the remainder of this year and subsequent years. (Use an attachment if necessary):

Moving budget in the Sheriff's Operations from 92300 (Replacement Mach & Equip) to the correct accounts for the purchase of the 800 MHz radios. Originally we budgeted all the radios and accessories in 92300. After reviewing all invoices, we have found that there were items that should not be included in the fixed asset (92300).

Do you anticipate that this Budget Revision will provide sufficient funds to complete the year? YES or NO
If not, please explain (use an attachment if necessary):

Auditor's Office Aaron Nazgaurton
Requesting Official

TO BE COMPLETED BY AUDITOR'S OFFICE

- ☐ A schedule of previously processed Budget Revisions/Amendments is attached
- ☑ Unencumbered funds are available for this budget revision.
- ☑ Comments: Move bdgt fr class 9 to 2 & 7

Auditor's Office

PRESIDING COMMISSIONER | **DISTRICT I COMMISSIONER** | **DISTRICT II COMMISSIONER**

Budget Revision for Department 1251

	Increase $	Account	Decrease $	Account	
	$ 185	23810			
	$ 74,700	71100			
	$ 22,020	23850			
	$ 2,458	23860			
			$ 99,363	92300	
Total	**$ 99,363**		**$ 99,363**		$ -

PO #: 2026-801

PO #2
Q #2

6/4/26
REQUEST DATE

PURCHASE REQUISITION
BOONE COUNTY, MISSOURI

8036	MOTOROLA SOLUTIONS INC	113 - MARC/KCRPC
VENDOR NO.	**VENDOR NAME**	**BID NUMBER**

Ship to Department # 1251 **Bill to Department # 1251**

Department	Account	Item Description	Qty	Unit Price	Amount
~~1251~~	~~92300~~	~~APX8500FLASHPORT~~			~~$0.00~~
~~1251~~	~~92300~~	~~T8425A SFTWRE LIC DIG SMZN~~	~~1~~	~~0.00~~	~~$0.00~~
~~1251~~	~~92300~~	~~GA01630AB SMARTCONNECT~~	~~5~~	~~0.00~~	~~$0.00~~
~~1251~~	~~92300~~	~~GA00580AB - UPGRE TDMA~~	~~5~~	~~365.40~~	~~$1,827.00~~
~~1251~~	~~92300~~	~~G298AU ASTRO 25 OTARW/MKEY~~	~~5~~	~~601.20~~	~~$3,006.00~~
~~1251~~	~~92300~~	~~GA09001AB WIFI CAPABILITY~~	~~5~~	~~244.20~~	~~$1,221.00~~
~~1251~~	~~23810~~	T7936A SFTWRE APX UCM UMC CD	1	61.53	~~$61.53~~
~~1251~~	~~92300~~	~~CA00182AR AES EAS ENCRYP SFTWR~~	~~5~~	~~745.00~~	~~$3,725.00~~
1251	92300	APX8500 Radio Upgrades	5	1,955.80	$9,779-
					$0.00
					$0.00
					$0.00
					$0.00
					$0.00
					$0.00
					$0.00
					$0.00
			GRAND TOTAL:		9,840.53

I certify that the goods, services or charges above specified are necessary for the use of this department, are solely for the benefit of the county, and have been procured in accordance with statutory bidding requirements.

Approving Official

Prepared By

Auditor Approval

PO # 2026 - 202

PO # 3
Q # 3

6/4/26
REQUEST DATE

PURCHASE REQUISITION
BOONE COUNTY, MISSOURI

8036 — VENDOR NO.

MOTOROLA SOLUTIONS INC — VENDOR NAME

113 - MARC/KCRPC — BID NUMBER

Ship to Department # 1251

Bill to Department # 1251

Department	Account	Item Description	Qty	Unit Price	Amount
~~1251~~	~~92300~~	~~APX8500FLASHPORT~~			~~$0.00~~
~~1251~~	~~92300~~	~~T8423A SFTWRE LIC DIG CONV~~	~~1~~	~~0.00~~	~~$0.00~~
~~1251~~	~~92300~~	~~G361AJ SFTWRE ASTRO P25 TRN~~	~~6~~	~~244.20~~	~~$1,465.20~~
~~1251~~	~~92300~~	~~G347AP SFTWRE CONV SMZNE~~	~~6~~	~~649.80~~	~~$3,898.80~~
~~1251~~	~~92300~~	~~GA01630AB SMARTCONNECT~~	~~6~~	~~0.00~~	~~$0.00~~
~~1251~~	~~92300~~	~~GA00580AB SFTWRE TO TDMA~~	~~6~~	~~365.40~~	~~$2,192.40~~
~~1251~~	~~92300~~	~~G298AU ASTRO 25 OTARW/MKEY~~	~~6~~	~~601.20~~	~~$3,607.20~~
~~1251~~	~~92300~~	~~GA09001AB WIFI~~	~~6~~	~~244.20~~	~~$1,465.20~~
~~1251~~	~~92300~~	~~GA00244AE SFTWRE ENAB 7/800~~	~~6~~	~~649.80~~	~~$3,898.80~~
~~1251~~	~~92300~~	~~G173AL SMRTZN OMNILINK~~	~~6~~	~~162.60~~	~~$975.60~~
~~1251~~	23810.	T7936A SFTWRE APX UCM UP CD	1	61.53	~~$61.53~~
~~1251~~	~~92300~~	~~GA00182AR AES ENCRY SFTWRE~~	~~6~~	~~745.00~~	~~$4,470.00~~
1251	92300	APX8500 Radio Upgrade	6	3,662.20	$21,973.20
					$0.00
					$0.00
					$0.00
					$0.00

GRAND TOTAL: 22,034.73

I certify that the goods, services or charges above specified are necessary for the use of this department, are solely for the benefit of the county, and have been procured in accordance with statutory bidding requirements.

Approving Official

Prepared By

Auditor Approval

Po #: 2026-003
PO #4
Q #4

6/4/26
REQUEST DATE

PURCHASE REQUISITION
BOONE COUNTY, MISSOURI

8036	MOTOROLA SOLUTIONS INC	113 - MARC/KCRPC
VENDOR NO.	VENDOR NAME	BID NUMBER

Ship to Department # 1251 **Bill to Department # 1251**

Department	Account	Item Description	Qty	Unit Price	Amount
~~1251~~	~~92300~~	~~APX8500FLASHPORT~~			~~$0.00~~
~~1251~~	~~92300~~	~~T8423A SFTWRE LIC DIG CONV~~	~~1~~	~~0.00~~	~~$0.00~~
~~1251~~	~~92300~~	~~G361AJ SFTWRE ASTRO P25 TRN~~	~~9~~	~~244.20~~	~~$2,197.80~~
~~1251~~	~~92300~~	~~G347AP SFTWRE CONV SMZNE~~	~~9~~	~~649.80~~	~~$5,848.20~~
~~1251~~	~~92300~~	~~G173AL SMRTZN OMNILINK~~	~~9~~	~~162.60~~	~~$1,463.40~~
~~1251~~	~~92300~~	~~GA01630AB SMARTCONNECT~~	~~9~~	~~0.00~~	~~$0.00~~
~~1251~~	~~92300~~	~~G193AL ADP ONLY FLP~~	~~9~~	~~0.00~~	~~$0.00~~
~~1251~~	~~92300~~	~~GA00580AB SFTWRE UPG TDMA~~	~~9~~	~~365.40~~	~~$3,288.60~~
~~1251~~	~~92300~~	~~G298AU ASTRO 25 OTARW/MUKEY~~	~~9~~	~~601.20~~	~~$5,410.80~~
~~1251~~	~~92300~~	~~GA09001AB WIFI CAPABILITY~~	~~9~~	~~244.20~~	~~$2,197.80~~
~~1251~~	~~92300~~	~~GA00244AE SFTWRE EN 7/800FLP~~	~~9~~	~~649.80~~	~~$5,848.20~~
1251	23810	T7936A SFTWRE APXUCM CD	1	61.53	$61.53
~~1251~~	~~92300~~	~~CA00182AR AES ENCRY SFTWRE~~	~~9~~	~~745.00~~	~~$6,705.00~~
1251	92300	APX8500 Radio Upgrades	9	3,662.20	$32,959.80
					$0.00
					$0.00
					$0.00
				GRAND TOTAL:	33,021.33

I certify that the goods, services or charges above specified are necessary for the use of this department, are solely for the benefit of the county, and have been procured in accordance with statutory bidding requirements.

Approving Official

Prepared By

Auditor Approval

pg

PO#6
Q#6

6/4/26
REQUEST DATE

PURCHASE REQUISITION
BOONE COUNTY, MISSOURI

8036
VENDOR NO.

MOTOROLA SOLUTIONS INC
VENDOR NAME

113 - MARC/KCRPC
BID NUMBER

Ship to Department # 1251

Bill to Department # 1251

Department	Account	Item Description	Qty	Unit Price	Amount
~~1251~~	~~92300~~	~~W22BA STD PALM MCROPH APX~~	~~66~~	~~46.60~~	~~$3,075.60~~
~~1251~~	~~92300~~	~~QA09113AB BSLN RELEASE SW~~	~~66~~	~~0.00~~	~~$0.00~~
~~1251~~	~~92300~~	~~GA01630AA SMARTCONNECT~~	~~66~~	~~0.00~~	~~$0.00~~
~~1251~~	~~92300~~	~~G361AH P25 TRNK SFTWRE APX~~	~~66~~	~~193.51~~	~~$12,771.66~~
~~1251~~	~~92300~~	~~W355AS STATUS/MESS 8 APX~~	~~66~~	~~306.99~~	~~$20,261.34~~
~~1251~~	~~92300~~	~~HKN6189B CABLE CH DEK~~	~~66~~	~~33.80~~	~~$2,230.80~~
1251	92300	APX 8500 Mobile Radio	66	7,407.59	$ 488,900.94
1251	71100	ENH 3 Year Essential Svc	66	288-	$ 19,008.[illegible]
					$0.00
					$0.00
					$0.00
					$0.00
					$0.00
					$0.00
					$0.00
					$0.00
					$0.00

GRAND TOTAL: $507,908.94

I certify that the goods, services or charges above specified are necessary for the use of this department, are solely for the benefit of the county, and have been procured in accordance with statutory bidding requirements.

Approving Official

Prepared By

Auditor Approval

PO: #2026-206

PO #7
Q #7

8/4/26
REQUEST DATE

PURCHASE REQUISITION
BOONE COUNTY, MISSOURI

8036
VENDOR NO.

MOTOROLA SOLUTIONS INC
VENDOR NAME

113 - MARC/KCRPC
BID NUMBER

Ship to Department # 1251

Bill to Department # 1251

Department	Account	Item Description	Qty	Unit Price	Amount
~~1251~~	~~92300~~	~~APX8000~~			~~$0.00~~
~~1251~~	~~92300~~	~~H91TGD9PW6AN MODEL 2.5~~	~~147~~	~~4498.88~~ 4061.35	~~$661,335.64~~ 597,019.92
~~1251~~	~~92300~~	~~Q806CB ASTRO DIG CAI OPERA~~	~~147~~	~~331.97~~	~~$48,799.59~~
~~1251~~	~~92300~~	~~Q361AN P25 9600 BAUD TRNK~~	~~147~~	~~193.06~~	~~$28,379.82~~
~~1251~~	~~92300~~	~~QA00580AA TDMA OPERATION~~	~~147~~	~~289.86~~	~~$42,609.42~~
~~1251~~	~~92300~~	~~QA05509AA DELETE UHF BAND~~	~~147~~	~~437.53~~	~~$64,316.91~~
~~1251~~	~~92300~~	~~Q887AU 5Y ESSENTIAL SERVICE~~	~~147~~	~~306.00~~	~~$44,982.00~~
~~1251~~	~~92300~~	~~QA09007AA WIFI PROVISIONING~~	~~147~~	~~0.00~~	~~$0.00~~
~~1251~~	~~92300~~	~~QA09001AB WIFI CAPABILITY~~	~~147~~	~~193.06~~	~~$28,379.82~~
~~1251~~	~~92300~~	~~Q498AU ASTRO 25 OTARW/MUKE~~	~~147~~	~~476.36~~	~~$70,024.92~~
~~1251~~	~~92300~~	~~H38BS SMARTZONE OPERATION~~	~~147~~	~~965.84~~	~~$141,978.48~~
~~1251~~	~~92300~~	~~QA07682AA SMARTCONNECT~~	~~147~~	~~0.00~~	~~$0.00~~
~~1251~~	~~92300~~	~~QA09113AB BASELINE REL SW~~	~~147~~	~~0.00~~	~~$0.00~~
1251	92300	APX8000 Portable Radios	147	7102.16	$1,044,017.52
~~1251~~	~~92300~~ 71100	5 Year Essential Service	147	306	~~44,982~~
1251	~~92850~~	Charger Desktop Single Unit	147	109.15	~~16,045.05~~ +1.47
1251	~~92860~~	Charger Vehicular Travel	35	70.22	$2,457.70
				GRAND TOTAL:	1,107,501.08

Includes Discount

Subtract from total

1107,502.27

I certify that the goods, services or charges above specified are necessary for the use of this department, are solely for the benefit of the county, and have been procured in accordance with statutory bidding requirements.

Approving Official

Prepared By

Auditor Approval

Po: #2026-207

6/4/26
REQUEST DATE

PURCHASE REQUISITION
BOONE COUNTY, MISSOURI

PO ±8
Q ±8

8036	MOTOROLA SOLUTIONS INC	113 - MARC/KCRPC
VENDOR NO.	VENDOR NAME	BID NUMBER

Ship to Department # 1251 **Bill to Department # 1251**

Department	Account	Item Description	Qty	Unit Price	Amount
~~1251~~	~~92300~~	~~APX8000~~			~~$0.00~~
~~1251~~	~~92300~~	~~H91TGD9PW6AN MODEL 2.5~~	~~35~~	40580 ~~4489.73~~	141858.15 ~~$157,140.70~~ Include Discou
~~1251~~	~~92300~~	~~Q806CB ASTRO DIG CAI OPERA~~	~~35~~	~~331.30~~	~~$11,595.50~~
~~1251~~	~~92300~~	~~Q361AN P25 9600 BAUD TRNK~~	~~35~~	~~192.67~~	~~$6,743.45~~
~~1251~~	~~92300~~	~~QA00580AA TDMA OPERATION~~	~~35~~	~~289.27~~	~~$10,124.45~~
~~1251~~	~~92300~~	~~QA05509AA DELETE UHF BAND~~	~~35~~	~~-436.64~~	~~-$15,282.40~~ Subtract from
~~1251~~	74100	Q887AU 5Y ESSENTIAL SERVICE	35	306.00	$10,710.00
~~1251~~	~~92300~~	~~QA09007AA WIFI PROVISIONING~~	~~35~~	~~0.00~~	~~$0.00~~
~~1251~~	~~92300~~	~~QA09001AB WIFI CAPABILITY~~	~~35~~	~~192.67~~	~~$6,743.45~~
~~1251~~	~~92300~~	~~Q498AU ASTRO 25 OTARW/MUKE~~	~~35~~	~~475.39~~	~~$16,638.65~~
~~1251~~	~~92300~~	~~H38BS SMARTZONE OPERATION~~	~~35~~	~~963.88~~	~~$33,735.80~~
~~1251~~	~~92300~~	~~QA07682AA SMARTCONNECT~~	~~35~~	~~0.00~~	~~$0.00~~
~~1251~~	~~92300~~	~~QA09113AB BASELINE REL SW~~	~~35~~	~~0.00~~	~~$0.00~~
~~1251~~	~~92300~~	~~Q629AH SFTWRE AES ENCRY ADP~~	~~35~~	~~305.65~~	~~$10,697.75~~
1251	23850	NNTN8844B CHARGER MULTI 6W/DI	6	995.84	$5,975.04
1251	92300	APX 8000 Portable Radios	35	6,878.17	$ 240,735.95 +20¢

GRAND TOTAL: ~~257,420.79~~

I certify that the goods, services or charges above specified are necessary for the use of this department, are solely for the benefit of the county, and have been procured in accordance with statutory bidding requirements.

257,420.99

Approving Official

Prepared By

Auditor Approval

SUBLSCR BOONE SUBSIDIARY LEDGER INQUIRY MAIN SCREEN 7/17/26 13:06:32

Year	2026	Original Appropriation	
Dept	12511 GF SHERIFF OPERATIONS	Revisions	
Acct	23810 UNTAGGED HARDWARE AND SOFTWARE	Original + Revisions	
Fund	100 GENERAL FUND	Expenditures	
		Encumbrances	184.59
Class/Account	A ACCOUNT	Actual To Date	184.59
Account Type	E EXPENSE	Remaining Balance	184.59-
Normal Balance	D DEBIT	Shadow Balance	184.59-

Expenditures by Period

January		July	
February		August	
March		September	
April		October	
May		November	
June		December	

F2=Key Scr F3=Exit F5=Ledger Transactions F7=Transactions F9=Budget

SUBLSCR BOONE SUBSIDIARY LEDGER INQUIRY MAIN SCREEN 7/17/26 13:06:53

Year	2026	Original Appropriation	
Dept	1251 GF SHERIFF OPERATIONS	Revisions	
Acct	74100 OUTSOURCED SERVICES	Original + Revisions	
Fund	100 GENERAL FUND	Expenditures	
		Encumbrances	74,700.00
Class/Account	A ACCOUNT	Actual To Date	74,700.00
Account Type	E EXPENSE	Remaining Balance	74,700.00-
Normal Balance	D DEBIT	Shadow Balance	74,700.00-

Expenditures by Period

January		July	
February		August	
March		September	
April		October	
May		November	
June		December	

F2=Key Scr F3=Exit F5=Ledger Transactions F7=Transactions F9=Budget

SUBLSCR BOONE SUBSIDIARY LEDGER INQUIRY MAIN SCREEN 7/17/26 13:07:11

Year	2026	Original Appropriation	89,614.00
Dept	1251 GF SHERIFF OPERATIONS	Revisions	
Acct	28850 UNTAGGED EQUIPMENT & TOOLS	Original + Revisions	89,614.00
Fund	100 GENERAL FUND	Expenditures	11,355.65
		Encumbrances	22,020.09
Class/Account	A ACCOUNT	Actual To Date	33,375.74
Account Type	E EXPENSE	Remaining Balance	56,238.26
Normal Balance	D DEBIT	Shadow Balance	56,238.26

Expenditures by Period

January	583.75	July	
February	449.00	August	
March	644.20	September	
April	3,271.57	October	
May	3,504.65	November	
June	2,902.48	December	

F2=Key Scr F3=Exit F5=Ledger Transactions F7=Transactions F9=Budget

SUBLSCR BOONE SUBSIDIARY LEDGER INQUIRY MAIN SCREEN 7/17/26 13:07:32

Year	2026	Original Appropriation	27,600.00
Dept	1251 GF SHERIFF OPERATIONS	Revisions	
Acct	23860 VEHICLE EQUIPMENT <$1000	Original + Revisions	27,600.00
Fund	100 GENERAL FUND	Expenditures	80,063.92
		Encumbrances	27,457.70
Class/Account	A ACCOUNT	Actual To Date	82,521.62
Account Type	E EXPENSE	Remaining Balance	54,921.62-
Normal Balance	D DEBIT	Shadow Balance	57,319.24-

Expenditures by Period

January		July	85.07
February	221.95	August	
March	4.93	September	
April	37,479.09	October	
May	27,881.54	November	
June	14,391.34	December	

F2=Key Scr F3=Exit F5=Ledger Transactions F7=Transactions F9=Budget

SUBLSCR BOONE SUBSIDIARY LEDGER INQUIRY MAIN SCREEN 7/17/26 13:10:39

Year	2026	Original Appropriation	2,343,375.00
Dept	1251 GF SHERIFF OPERATIONS	Revisions	
Acct	92300 REPLCMENT MACH & EQUIP	Original + Revisions	2,343,375.00
Fund	100 GENERAL FUND	Expenditures	89,780.53
		Encumbrances	1,928,770.28
Class/Account	A ACCOUNT	Actual To Date	2,018,550.81
Account Type	E EXPENSE	Remaining Balance	324,824.19
Normal Balance	D DEBIT	Shadow Balance	324,824.19

Expenditures by Period

January	8,995.00	July	12,948.30
February	14,500.00	August	
March	15,690.00	September	
April	3,190.00	October	
May	17,028.18	November	
June	17,429.05	December	

F2=Key Scr F3=Exit F5=Ledger Transactions F7=Transactions F9=Budget

371 -2026

CERTIFIED COPY OF ORDER

July Session ~~of the July Ad~~journed 26

STATE OF MISSOURI } **ea.** **Term. 20**

County of Boone

In the County Commission of said county, on the 28th **day of** July **20** 26

the following, among other proceedings, were had, viz:

Now on this day the County Commission of the County of Boone does hereby approve Contract C001105 (60526CO0244) with Premier Truck Group of Columbia for the purchase of three 2027 Western Star 47X Dump Trucks. The terms of the agreement are set out in the attached, and the Presiding Commissioner is authorized to sign the same.

Done this 28th day of July 2026.

Kip Kendrick
Presiding Commissioner

Justin Aldred
District I Commissioner

Janet M. Thompson
District II Commissioner

ATTEST:

Brianna L Lennon SEO
Brianna L. Lennon
Clerk of the County Commission

Boone County Purchasing

Amy Gerskin, CPPB
Senior Buyer

5551 S. Tom Bass Rd.
Room 205
Columbia, MO 65201
Phone: (573) 886-4393
agerskin@boonemo.gov

June 2, 2026

TO: Bid File
FROM: Amy Gerskin, Senior Buyer
RE: Cooperative Contract: State of MO 60526CO0244 – Three 2027 Western Star 47X for Boone County Road and Bridge

Boone County Road & Bridge Department requests permission to utilize the State of MO cooperative contract 60526CO0244 with Penske Commercial Vehicles US, LLC DBA Premier Truck Group of Columbia for the purchase of three (3) 2027 Western Star 47X trucks. The county contract number is C001105.

The total cost of this purchase is $473,343.00 and will be paid by department 2040 – Road and Bridge Road Maintenance and account 92400 – Replacement Auto/Trucks. A budget amendment has been processed by the department.

In addition, purchasing requests permission to dispose of the following two (2) 2016 Kenworth Dump trucks by auction. These disposal forms also correspond to the replacement parts purchased on contract C001107.

- Fixed Asset 19852, VIN 1NKDLP0X3GR104601
- Fixed Asset 19816, VIN 1NKDLP0X1GR104600

The third 2016 Kenworth dump truck in this series was previously approved for disposal on commission order 81-2026.

cc: Greg Edintong, Robert Sapp – Road & Bridge
Contract File

Docusign Envelope ID: FFB00063-5087-8929-8067-CE06E5864C59

Commission Order 371-2026

PURCHASE AGREEMENT
FOR
2027 FREIGHTLINER 114SD FOR BOONE COUNTY ROAD & BRIDGE

THIS AGREEMENT, County contract **C001105**, awarded from the State of Missouri Office of Administration contract 60526CO0244, dated the 28th day of July 2026, is made between Boone County, Missouri, a political subdivision of the State of Missouri through the Boone County Commission, herein "County" and **Penske Commercial Vehicles US, LLC DBA Premier Truck Group of Columbia**, herein "Vendor."

IN CONSIDERATION of the parties' performance of the respective obligations contained herein, the parties agree as follows:

1. ***Contract Documents –*** This agreement shall consist of this **Purchase Agreement #C001105** for **Three (3) New 2027 Western Star 47X** in compliance with all bid specifications and any addendum issued for the State of Missouri contract 60526CO0244, Premier Truck Group of Columbia Quote dated 06/01/2026, and Boone County's Standard Terms and Conditions. All such documents shall constitute the contract documents incorporated herein by reference. If not attached, service or product data, specifications, and literature submitted with the bid response may be permanently maintained in the County Purchasing Office contract file. In the event of a conflict between any of the foregoing documents, this Purchase Agreement, State of Missouri contract 60526CO0244, and Boone County Standard Terms and Conditions shall prevail and control over the vendor's bid response or vendor's quote form.

2. ***Purchase –*** The County agrees to purchase from the Vendor, and the Vendor agrees to supply the County with **Three (3) New 2027 Western Star 47X** as specified in Premier Truck Group of Columbia's Quote dated 04/22/2026 for a total price of **$473,343.00**.

Item	Unit Price	Extended Price
New 2027 Western Star 47X (QTY 3)	$157,781.00	$473,343.00
Towing 5YR/ Unlimited Miles $750 Cap	Included	
Allison Ext 5YR/ Unlimited Miles	Included	
Ext Ult Engine 5yr/ 200K Miles	Included	
Grand Total Vehicle Cost:		**$473,343.00**

3. ***Delivery –*** The Vendor agrees to deliver equipment as outlined in the bid documents. Delivery shall be to Boone County Road & Bridge, Attn: Greg Edington, 5551 Tom Bass Road, Columbia, MO 65201. If delivery is not or cannot be made within this period, the contractor must receive written authorization from the Boone County Road & Bridge Department for the delayed delivery. The order may be canceled if the estimated shipping time is not acceptable.

   All deliveries shall be made **FOB Destination** *with freight prepaid and charged back*. The seller pays the freight and charges back the buyer by adding the freight charges to the invoices. A copy of the freight bill should be attached to the invoices as evidence of correct freight billing.

4. ***Warranty*** – The standard manufacturer warranty shall be provided to the County at the time of the County's acceptance.

5. ***Billing and Payment*** – All billing shall be invoiced to the Boone County Road and Bridge Department at 5551 S. Tom Bass Road, Columbia, MO, 65201. The invoice must reference the Purchase Agreement number stated in paragraph 1. Billings may only include the prices listed on the quote. No additional fees for paperwork processing, labor, or taxes shall be included as additional charges. The County agrees to pay

Docusign Envelope ID: FFB00063-5087-8929-8067-CE06E5864C59

all invoices within thirty days of receipt. In the event of a billing dispute, the County reserves the right to withhold payment on the disputed amount; in the event, that the billing dispute is resolved in favor of the Vendor, the County agrees to pay interest at a rate of 9% per annum on disputed amounts withheld commencing from the last date that payment was due.

6. ***Binding Effect*** **–** This agreement shall be binding upon the parties hereto and their successors and assigns as long as this agreement remains in full force and effect.

7. ***Termination*** **–** The County may terminate this agreement upon thirty (30) calendar days advance written notice for any of the following reasons or under any of the following circumstances:

- **a.** The County may terminate this agreement due to a material breach of any term or condition of this agreement, or
- **b.** The County may terminate this agreement if in the opinion of the Boone County Commission if the delivery of products is delayed or products delivered are not in conformity with bidding specifications or variances authorized by the County, or
- **c.** Termination for Convenience – The county may terminate this Agreement for any reason or no reason upon sixty (60) days' written notice to the contractor, or
- **d.** If appropriations are not made available and budgeted for any calendar year.

IN WITNESS WHEREOF the parties, through their duly authorized representatives, have executed this agreement on the day and year first above written.

PENSKE COMMERCIAL VEHICLES US LLC DBA PREMIER TRUCK GROUP OF COLUMBIA

Signed by:

By _____

75B1226FBD064F6...

Title: General Manager

BOONE COUNTY, MISSOURI

By: Boone County

Signed by:

kip kendrick

2B83ECDD7F6E4A6...

Kip Kendrick, Presiding Commissioner

APPROVED AS TO FORM:

DocuSigned by:

_____

7D71DEAEB9D74DD...

CJ Dykhouse, County Counselor

ATTEST:

Signed by:

Brianna L. Lennon

242B827B32F14BF...

Brianna L. Lennon, County Clerk

AUDITOR CERTIFICATION:

In accordance with RSMo 50.660, I hereby certify that a sufficient unencumbered appropriation balance exists and is available to satisfy the obligation(s) arising from this contract. (Note: Certification is not required if the terms of this contract do not create a measurable county obligation at this time.)

DocuSigned by:

Kyle Rieman by JS

E3D6F2FD3CE04B1...

Signature	Date	Appropriation Account
	7/20/2026	2040/92400 - $473,343.00

Docusign Envelope ID: FFB00063-5087-8929-8067-CE06E5864C59

STANDARD CONTRACT TERMS AND CONDITIONS - BOONE COUNTY, MISSOURI

1. The Contractor shall comply with all applicable federal, state, and local laws, and failure to do so, in County's sole discretion, shall give County the right to terminate this Contract.

2. Responses shall include all charges for packing, delivery, installation, etc., (unless otherwise specified) to the Boone County Department identified in the Request for Bid and/or Proposal.

3. The Boone County Commission has the right to accept or reject any part or parts of all bids, to waive technicalities, and to accept the offer the County Commission considers the most advantageous to the County. Boone County reserves the right to award this bid on an item-by-item basis, or an "all or none" basis, whichever is in the best interest of the County.

4. Bidders must use the bid forms provided for the purpose of submitting bids, must return the bid and bid sheets comprised in this bid, give the unit price, extended totals, and sign the bid. The Purchasing Director reserves the right, when only one bid has been received by the bid closing date, to delay the opening of bids to another date and time in order to revise specifications and/or establish further competition for the commodity or service required. The one (1) bid received will be retained unopened until the new Closing date, or at the request of the bidder, returned unopened for re-submittal at the new date and time of bid closing.

5. When products or materials of any particular producer or manufacturer are mentioned in our specifications, such products or materials are intended to be descriptive of type or quality and not restricted to those mentioned.

6. Do not include Federal Excise Tax or Sales and Use Taxes in the bid process, as the law exempts the County from them.

7. The delivery date shall be stated in definite terms, as it will be taken into consideration in awarding the bid.

8. The County Commission reserves the right to cancel all or any part of orders if delivery is not made or work is not started as guaranteed. In case of a delay, the Contractor must notify the Purchasing Department.

9. In case of default by the Contractor, the County of Boone will procure the articles or services from other sources and hold the Bidder responsible for any excess cost occasioned thereby.

10. Failure to deliver as guaranteed may disqualify Bidder from future bidding.

11. Prices must be as stated in units of the quantity specified and must be firm. Bids qualified by escalator clauses may not be considered unless specified in the bid specifications.

12. No bid transmitted by fax machine or e-mail will be accepted.

13. The County of Boone, Missouri expressly denies responsibility for or ownership of any item purchased until the same is delivered to the County and is accepted by the County.

15. The County, from time to time, uses federal grant funds for the procurement of goods and services. Accordingly, the provider of goods and/or services shall comply with federal laws, rules, and regulations applicable to the funds used by the County for said procurement, and contract clauses required by the federal government in such circumstances are incorporated herein by reference. These clauses can generally be found in the Federal Transit Administration's Best Practices Procurement Manual – Appendix A. Any questions regarding the applicability of federal clauses to a particular bid should be directed to the Purchasing Department prior to bid opening.

Docusign Envelope ID: FFB00063-5087-8929-8067-CE06E5864C59

16. In the event of a discrepancy between a unit price and an extended line-item price, the unit price shall govern.

17. Should an audit of the Contractor's invoices during the term of the Agreement, and any renewals thereof, indicate that the County has remitted payment on invoices that constitute an over-charging to the County above the pricing terms agreed to herein, the Contractor shall issue a refund check to the County for any over-charges within 30-days of being notified of the same.

18. For all bid responses over $25,000, if any manufactured goods or commodities proposed with the bid/proposal response are manufactured or produced outside the United States, this MUST be noted on the Bid/Proposal Response Form or a Memo attached.

19. Pursuant to Section 34.600 RSMo, for contracts $100,000 and greater, the Contractor/Vendor certifies it is not currently engaged in and shall not, for the duration of the contract, engage in a boycott of goods or services from the State of Israel; companies doing business in or with Israel or authorized by, licensed by, or organized under the laws of the State of Israel; or persons or entities doing business in the State of Israel.

20. For all titled vehicles and equipment, the dealer must use the actual delivery date to the County on all transfer documents including the Certificate of Origin (COO), Manufacturer's Statement of Origin (MSO), Bill of Sale (BOS), and Application for Title.

21. Equipment and serial and model numbers - The contractor is strongly encouraged to include equipment serial and model numbers for all amounts invoiced to the County. If equipment serial and model numbers are not provided on the face of the invoice, such information may be required by the County before issuing payment.

22. All equipment and supplies offered in a quote must be new, of current production, and available for marketing by the manufacturer unless the County clearly specifies that used, reconditioned, or remanufactured equipment and supplies may be offered.

23. The resulting agreement may be extended beyond the expiration date by order of the County on a month-to-month basis if the County cannot re-bid and/or award a new contract before the expiration date.

24. The County as a public governmental body is subject to the Missouri Sunshine Law (Chapter 610 RSMo) and will comply with requests for documents in accordance with that law.

Revised: 01/10/24

Docusign Envelope ID: FFB00063-5087-8929-8067-CE06E5864C59

Prepared For :
GREG EDDINGTON
BOONE COUNTY ROAD AND BRIDGE
5551 S TOM BASS RD
COLUMBIA, MO 65201
UNITED STATES
Phone :573-449-8515

Prepared by:
Mike Talleur
PREMIER TRUCK GROUP OF COLUMBIA
1660 JADE ROAD
COLUMBIA, MO 65201
Phone :1-573-886-0429

A proposal for
BOONE COUNTY ROAD AND BRIDGE

Prepared by
PREMIER TRUCK GROUP OF COLUMBIA

Mike Talleur

June 18, 2026

Western Star 47X

Components shown may not reflect all spec'd options and are not to scale

Prepared For :
GREG EDDINGTON
BOONE COUNTY ROAD AND BRIDGE
5551 S TOM BASS RD
COLUMBIA, MO 65201
UNITED STATES
Phone :573-449-8515

Prepared by:
Mike Talleur
PREMIER TRUCK GROUP OF COLUMBIA
1660 JADE ROAD
COLUMBIA, MO 65201
Phone :1-573-886-0429

SPECIFICATION PROPOSAL

Data Code	Description	Weight Front	Weight Rear
Price Level			
PRL-30X	47X/49X PRL-30X (EFF:MY27 ORDERS)		
Data Version			
DRL-041	SPECPRO21 DATA RELEASE VER 041		
Vehicle Configuration			
001-470	WESTERN STAR 47X	9,050	6,525
004-227	2027 MODEL YEAR SPECIFIED		
002-003	SET FORWARD AXLE - TRUCK	-480	480
019-006	TRAILER TOWING PROVISION AT END OF FRAME WITH SAE J560	10	10
003-001	LH PRIMARY STEERING LOCATION		
General Service			
AA1-003	TRUCK/TRAILER CONFIGURATION		
AA6-001	DOMICILED, USA 50 STATES (INCLUDING CALIFORNIA AND CARB OPT-IN STATES)		
99D-019	CARB CLEAN IDLE LABELS NOT FOR INITIAL REGISTRATION IN STATES REQUIRING CARB EMISSIONS CERTIFICATION (INCLUDES 6X4 INCH LABELS ON LOWER FORWARD OF DRIVER DOOR)		
A85-010	UTILITY/REPAIR/MAINTENANCE SERVICE		
A84-1GM	GOVERNMENT BUSINESS SEGMENT		
AA4-010	DIRT/SAND/ROCK COMMODITY		
AA5-002	TERRAIN/DUTY: 100% (ALL) OF THE TIME, IN TRANSIT, IS SPENT ON PAVED ROADS		
AB1-008	MAXIMUM 8% EXPECTED GRADE		
AB5-001	SMOOTH CONCRETE OR ASPHALT PAVEMENT - MOST SEVERE IN-TRANSIT (BETWEEN SITES) ROAD SURFACE		
995-1A5	WESTERN STAR VOCATIONAL WARRANTY		
A66-99D	EXPECTED FRONT AXLE(S) LOAD 18000.0 lbs		

Prepared For :
GREG EDDINGTON
BOONE COUNTY ROAD AND BRIDGE
5551 S TOM BASS RD
COLUMBIA, MO 65201
UNITED STATES
Phone :573-449-8515

Prepared by:
Mike Talleur
PREMIER TRUCK GROUP OF COLUMBIA
1660 JADE ROAD
COLUMBIA, MO 65201
Phone :1-573-886-0429

Data Code	Description	Weight Front	Weight Rear
A68-99D	EXPECTED REAR DRIVE AXLE(S) LOAD 40000.0 lbs		
A63-99D	EXPECTED GROSS VEHICLE WEIGHT CAPACITY 58000.0 lbs		
A70-99D	EXPECTED GROSS COMBINATION WEIGHT 80000.0 lbs		
Truck Service			
AA3-018	FRONT PLOW/END DUMP BODY		
AF3-1W0	HENDERSON		
Tractor Service			
AA2-005	FLATBED TRAILER		
AH6-001	SINGLE (1) TRAILER		
Engine			
101-3C0	DETROIT DD13 GEN 5 12.8L 470 HP @ 1625 RPM, 1900 GOV RPM, 1650 LB-FT @ 975 RPM		
Electronic Parameters			
79A-074	74 MPH ROAD SPEED LIMIT		
79B-000	CRUISE CONTROL SPEED LIMIT SAME AS ROAD SPEED LIMIT		
79F-013	FLEET MANAGEMENT - DAILY ENGINE USAGE ENABLED		
79G-006	5 MINUTES IDLE SHUTDOWN WITH CLUTCH AND SERVICE BRAKE OVERRIDE		
79K-010	PTO MODE ENGINE RPM LIMIT - 1300 RPM		
79P-032	PTO RPM CONTROL WITH STEERING WHEEL SWITCHES		
79T-001	PTO MODE RPM INCREMENT - 25 RPM		
79U-007	PTO GOVERNOR RAMP RATE - 250 RPM PER SECOND		
79W-008	ONE PTO SPEED VIA DASH SWITCH		
79X-013	PTO SPEED 1 SETTING - 1250 RPM		
80G-004	PTO MINIMUM RPM - 900		
80L-001	ENABLE AUTO ENGINE RPM ELEVATE FOR EXTENDED IDLE		

Prepared For :
GREG EDDINGTON
BOONE COUNTY ROAD AND BRIDGE
5551 S TOM BASS RD
COLUMBIA, MO 65201
UNITED STATES
Phone :573-449-8515

Prepared by:
Mike Talleur
PREMIER TRUCK GROUP OF COLUMBIA
1660 JADE ROAD
COLUMBIA, MO 65201
Phone :1-573-886-0429

Data Code	Description	Weight Front	Weight Rear
80W-001	MAINTENANCE SYSTEM WITH NO POP-UPS AND NO MENU IN CLUSTER		
80S-004	PTO 1, DASH SWITCH, ENGAGE WHILE DRIVING		

Engine Equipment

99C-024	EPA 2010/GHG 2024 CONFIGURATION		
13E-006	ALUMINUM OIL PAN		
105-001	ENGINE MOUNTED OIL CHECK AND FILL		
014-111	SIDE OF HOOD AIR INTAKE WITH ENGINE MOUNTED AIR CLEANER, WITH INSIDE/OUTSIDE AIR AND SNOW DOOR		
124-1D7	DR 12V 160 AMP 28-SI QUADRAMOUNT PAD ALTERNATOR WITH REMOTE BATTERY VOLT SENSE	-10	
292-236	(3) DTNA GENUINE, FLOODED STARTING, MIN 3000CCA, 555RC, THREADED STUD BATTERIES	-10	
290-1B9	BATTERY BOX WITH ALUMINUM COVER MOUNTED LONG SIDE TO RAIL	-50	10
282-003	SINGLE BATTERY BOX FRAME MOUNTED LH SIDE BACK OF CAB		
291-017	WIRE GROUND RETURN FOR BATTERY CABLES WITH ADDITIONAL FRAME GROUND RETURN		
289-020	UNPOLISHED ALUMINUM WST BATTERY BOX COVER		
293-058	NON-ESSENTIAL POSITIVE LOAD DISCONNECT, IN CAB CONTROL SWITCH MOUNTED OUTBOARD OF DRIVER SEAT	2	
107-046	BW MODEL FE-921 19.0 CFM SINGLE CYLINDER AIR COMPRESSOR WITH SAFETY VALVE		
152-041	ELECTRONIC ENGINE INTEGRAL SHUTDOWN PROTECTION SYSTEM		
128-002	JACOBS COMPRESSION BRAKE		
016-1C2	RH OUTBOARD UNDER STEP MOUNTED HORIZONTAL AFTERTREATMENT SYSTEM ASSEMBLY WITH RH B-PILLAR MOUNTED VERTICAL TAILPIPE		
28F-015	ENGINE AFTERTREATMENT DEVICE, AUTOMATIC OVER THE ROAD ACTIVE REGENERATION AND VIRTUAL REGENERATION REQUEST SWITCH IN CLUSTER AND DASH MOUNTED INHIBIT SWITCH		
239-032	11 FOOT 00 INCH (132 INCH+0/-5.9 INCH) EXHAUST SYSTEM HEIGHT		
237-1CR	RH CURVED VERTICAL TAILPIPE B-PILLAR MOUNTED ROUTED FROM STEP		

Prepared For :
GREG EDDINGTON
BOONE COUNTY ROAD AND BRIDGE
5551 S TOM BASS RD
COLUMBIA, MO 65201
UNITED STATES
Phone :573-449-8515

Prepared by:
Mike Talleur
PREMIER TRUCK GROUP OF COLUMBIA
1660 JADE ROAD
COLUMBIA, MO 65201
Phone :1-573-886-0429

Data Code	Description	Weight Front	Weight Rear
23U-002	13 GALLON DIESEL EXHAUST FLUID TANK	9	3
23Z-005	UNPOLISHED ALUMINUM WST DIESEL EXHAUST FLUID TANK COVER		
43X-001	LH HEAVY DUTY STANDARD DIESEL EXHAUST FLUID TANK LOCATION		
43Y-001	STANDARD DIESEL EXHAUST FLUID TANK CAP		
242-001	STAINLESS STEEL AFTERTREATMENT DEVICE/MUFFLER/TAILPIPE SHIELD		
273-058	AIR POWERED ON/OFF ENGINE FAN CLUTCH		
276-001	AUTOMATIC FAN CONTROL WITHOUT DASH SWITCH, NON ENGINE MOUNTED		
110-068	DDC SUPPLIED ENGINE MOUNTED FUEL FILTER/FUEL WATER SEPARATOR WITH WATER-IN-FUEL INDICATOR		
118-001	FULL FLOW OIL FILTER		
266-107	1400 SQUARE INCH VOCATIONAL RADIATOR		
103-039	ANTIFREEZE TO -34F, OAT (NITRITE AND SILICATE FREE) EXTENDED LIFE COOLANT		
171-007	GATES BLUE STRIPE COOLANT HOSES OR EQUIVALENT		
261-001	STANDARD CHARGE AIR COOLER PLUMBING		
270-023	HDEP FIXED RATIO COOLANT PUMP AND RADIATOR DRAIN VALVE		
168-002	LOWER RADIATOR GUARD		
138-005	PHILLIPS-TEMRO 1500 WATT/115 VOLT BLOCK HEATER	4	
140-053	BLACK PLASTIC ENGINE HEATER RECEPTACLE MOUNTED UNDER LH DOOR		
132-998	NO AIR INTAKE WARMER	-10	
155-076	DELCO 12V MOD 3.175-39MT+ STARTER WITH ENGINE ECU SOFTWARE PROTECTION AND INTEGRATED MAGNETIC SWITCH	-45	
Transmission			
342-1M3	ALLISON 4500 RDS AUTOMATIC TRANSMISSION WITH PTO PROVISION		
Transmission Equipment			
343-339	ALLISON VOCATIONAL PACKAGE 223 - AVAILABLE ON 3000/4000 PRODUCT FAMILIES WITH VOCATIONAL		

Prepared For :
GREG EDDINGTON
BOONE COUNTY ROAD AND BRIDGE
5551 S TOM BASS RD
COLUMBIA, MO 65201
UNITED STATES
Phone :573-449-8515

Prepared by:
Mike Talleur
PREMIER TRUCK GROUP OF COLUMBIA
1660 JADE ROAD
COLUMBIA, MO 65201
Phone :1-573-886-0429

Data Code	Description	Weight Front	Weight Rear
	MODELS RDS, HS, MH AND TRV		
84B-012	ALLISON VOCATIONAL RATING FOR ON/OFF HIGHWAY APPLICATIONS AVAILABLE WITH ALL PRODUCT FAMILIES		
84C-023	PRIMARY MODE GEARS, LOWEST GEAR 1, START GEAR 1, HIGHEST GEAR 6, AVAILABLE FOR 3000/4000 PRODUCT FAMILIES ONLY		
84D-023	SECONDARY MODE GEARS, LOWEST GEAR 1, START GEAR 1, HIGHEST GEAR 6, AVAILABLE FOR 3000/4000 PRODUCT FAMILIES ONLY		
84E-013	S1 PERFORMANCE PRIMARY SHIFT SCHEDULE, AVAILABLE FOR 3000/4000 PRODUCT FAMILIES ONLY		
84F-012	S1 PERFORMANCE SECONDARY SHIFT SCHEDULE, AVAILABLE FOR 3000/4000 PRODUCT FAMILIES ONLY		
84G-005	1500 RPM PRIMARY MODE SHIFT SPEED		
84H-009	1800 RPM SECONDARY MODE SHIFT SPEED		
84N-200	FUEL SENSE 2.0 DISABLED - PERFORMANCE - TABLE BASED		
353-073	QUICKFIT BODY LIGHTING CONNECTOR UNDER CAB, WITH CAP		
34C-011	ELECTRONIC TRANSMISSION WIRING TO CUSTOMER INTERFACE CONNECTOR		
362-2JT	CUSTOMER INSTALLED CHELSEA 281 SERIES PTO		
363-001	PTO MOUNTING, LH SIDE OF MAIN TRANSMISSION ALLISON & ZF		
341-018	MAGNETIC PLUGS, ENGINE DRAIN, TRANSMISSION DRAIN, AXLE(S) FILL AND DRAIN		
345-078	HEAVY DUTY ELECTRONIC TRANSMISSION SHIFT CONTROL, COLUMN MOUNTED		
370-006	WATER TO OIL TRANSMISSION COOLER		
346-003	TRANSMISSION OIL CHECK AND FILL WITH ELECTRONIC OIL LEVEL CHECK		
35T-001	ATF-SYNTHETIC AUTOMATIC TRANSMISSION FLUID		

Front Axle and Equipment

400-1BA	DETROIT DA-F-18.0-5 18,000# FL1 71.0 KPI/3.74 DROP SINGLE FRONT AXLE	90	
418-060	CONMET PRESET PLUS PREMIUM IRON FRONT HUBS	20	

Prepared For :
GREG EDDINGTON
BOONE COUNTY ROAD AND BRIDGE
5551 S TOM BASS RD
COLUMBIA, MO 65201
UNITED STATES
Phone :573-449-8515

Prepared by:
Mike Talleur
PREMIER TRUCK GROUP OF COLUMBIA
1660 JADE ROAD
COLUMBIA, MO 65201
Phone :1-573-886-0429

Data Code	Description	Weight Front	Weight Rear
402-030	MERITOR 16.5X6 Q+ CAST SPIDER CAM FRONT BRAKES, DOUBLE ANCHOR, FABRICATED SHOES	10	
403-002	NON-ASBESTOS FRONT BRAKE LINING		
419-023	CONMET CAST IRON FRONT BRAKE DRUMS		
427-998	NO FRONT BRAKE DUST SHIELDS		
409-006	FRONT OIL SEALS		
408-001	VENTED FRONT HUB CAPS WITH WINDOW, CENTER AND SIDE PLUGS - OIL		
405-003	HALDEX AUTOMATIC FRONT SLACK ADJUSTERS		
536-104	DUAL POWER STEERING GEARS, BENDIX 16-20K	80	
534-003	4 QUART POWER STEERING RESERVOIR	5	
533-001	OIL/AIR POWER STEERING COOLER	5	
40T-002	CURRENT AVAILABLE SYNTHETIC 75W-90 FRONT AXLE LUBE		
Front Suspension			
620-005	18,000# FLAT LEAF FRONT SUSPENSION	240	
619-002	THREADED SPRING PINS AND BUSHINGS - FRONT SUSPENSION		
62H-014	LEFT AND RIGHT FRONT SUSPENSION REAR SHACKLE PINS WITH ZERK FITTINGS OUTBOARD		
410-001	FRONT SHOCK ABSORBERS		
Rear Axle and Equipment			
420-1K3	MERITOR MT-40-14X 40,000# R-SERIES TANDEM REAR AXLE		10
450-060	CONMET PRESET PLUS PREMIUM IRON REAR HUBS		60
421-390	3.90 REAR AXLE RATIO		
424-003	IRON REAR AXLE CARRIER WITH OPTIONAL HEAVY DUTY AXLE HOUSING		40
386-044	RPL25 MERITOR MAIN DRIVELINE		
388-039	RPL20 MERITOR INTERAXLE DRIVELINE		

Prepared For :
GREG EDDINGTON
BOONE COUNTY ROAD AND BRIDGE
5551 S TOM BASS RD
COLUMBIA, MO 65201
UNITED STATES
Phone :573-449-8515

Prepared by:
Mike Talleur
PREMIER TRUCK GROUP OF COLUMBIA
1660 JADE ROAD
COLUMBIA, MO 65201
Phone :1-573-886-0429

Data Code	Description	Weight Front	Weight Rear
452-005	DRIVER CONTROLLED TRACTION DIFFERENTIAL - REAR MOST TANDEM/TRIDEM REAR AXLE		20
878-021	(1) INTERAXLE LOCK VALVE AND (1) DRIVER CONTROLLED DIFFERENTIAL LOCK REAR-REAR AXLE VALVE		
87A-005	INDICATOR LIGHT FOR EACH INTERAXLE LOCKOUT SWITCH		
87B-015	INDICATOR LIGHT FOR EACH DIFFERENTIAL LOCKOUT SWITCH, ENGAGE <5 MPH, DISENGAGE >25 MPH		
423-019	MERITOR 16.5X8.62 Q+ CAST SPIDER CAM REAR BRAKES, DOUBLE ANCHOR, FABRICATED SHOES		
433-002	NON-ASBESTOS REAR BRAKE LINING		
434-011	BRAKE CAMS AND CHAMBERS ON FORWARD SIDE OF DRIVE AXLE(S)		
451-023	CONMET CAST IRON REAR BRAKE DRUMS		
425-002	REAR BRAKE DUST SHIELDS		10
440-006	REAR OIL SEALS		
426-101	WABCO TRISTOP D LONGSTROKE 2-DRIVE AXLE SPRING PARKING CHAMBERS		
428-003	HALDEX AUTOMATIC REAR SLACK ADJUSTERS		
41T-002	CURRENT AVAILABLE SYNTHETIC 75W-90 REAR AXLE LUBE		
42T-001	STANDARD REAR AXLE BREATHER(S)		
Rear Suspension			
622-297	TUFTRAC GEN2 40,000# REAR SPRING SUSPENSION		410
621-108	9.5 INCH NOMINAL RIDE HEIGHT (460MM GLOBAL REFERENCE HEIGHT)		
431-003	AXLE CLAMPING GROUP		
624-025	55 INCH AXLE SPACING		
623-006	FORE/AFT AND TRANSVERSE CONTROL RODS		
439-002	REAR SHOCK ABSORBERS - TWO AXLES (TANDEM)		40
Pusher / Tag Equipment			
429-998	NO PUSHER/TAG BRAKE DUST SHIELDS		

Prepared For :
GREG EDDINGTON
BOONE COUNTY ROAD AND BRIDGE
5551 S TOM BASS RD
COLUMBIA, MO 65201
UNITED STATES
Phone :573-449-8515

Prepared by:
Mike Talleur
PREMIER TRUCK GROUP OF COLUMBIA
1660 JADE ROAD
COLUMBIA, MO 65201
Phone :1-573-886-0429

Data Code	Description	Weight Front	Weight Rear
Brake System			
490-1AU	WABCO 4S/4M ABS WITH TRACTION CONTROL WITH ATC SHUT OFF SWITCH		
871-001	REINFORCED NYLON, FABRIC BRAID AND WIRE BRAID CHASSIS AIR LINES		
46E-001	STANDARD AIR MANAGEMENT UNIT		
432-003	RELAY VALVE WITH 5-8 PSI CRACK PRESSURE, NO REAR PROPORTIONING VALVE		
480-086	BW AD-9SI BRAKE LINE AIR DRYER WITH HEATER		
483-003	BENDIX OIL COALESCING FILTER FOR AIR DRYER		
479-015	AIR DRYER FRAME MOUNTED		
460-001	STEEL AIR BRAKE RESERVOIRS		
477-016	BW DV-2 AUTO DRAIN VALVE WITHOUT HEATER TO WET TANK; DRAIN VALVE CABLES ON ALL OTHER TANKS		
Trailer Connections			
914-001	AIR CONNECTIONS TO END OF FRAME WITH GLAD HANDS FOR TRUCK AND NO DUST COVERS	5	5
296-010	PRIMARY CONNECTOR/RECEPTACLE WIRED FOR SEPARATE STOP/TURN, ABS CENTER PIN POWERED THROUGH IGNITION		
303-025	SAE J560 7-WAY PRIMARY TRAILER CABLE RECEPTACLE MOUNTED END OF FRAME		
310-998	NO TRAILER ELECTRICAL CABLE	-10	
Wheelbase & Frame			
545-129	5790MM (228 INCH) WHEELBASE, SFA ONLY		
546-106	13.0MM X 87.0MM X 311.0MM STEEL FRAME (0.51X3.43X12.24 INCH) 120 KSI	460	360
547-037	0.236 INCH (6.00MM) C-CHANNEL INNER FRAME REINFORCEMENT	220	500
548-803	TEM TO EVALUATE AND INSTALL FRAME RAIL REINFORCEMENT AS NEEDED FOR FRONT FRAME MOUNTED EQUIPMENT		
552-014	1900MM (75 INCH) REAR FRAME OVERHANG		
55W-007	FRAME OVERHANG RANGE: 71 INCH TO 80 INCH	-60	220

Prepared For :
GREG EDDINGTON
BOONE COUNTY ROAD AND BRIDGE
5551 S TOM BASS RD
COLUMBIA, MO 65201
UNITED STATES
Phone :573-449-8515

Prepared by:
Mike Talleur
PREMIER TRUCK GROUP OF COLUMBIA
1660 JADE ROAD
COLUMBIA, MO 65201
Phone :1-573-886-0429

Data Code	Description	Weight Front	Weight Rear
549-002	24 INCH INTEGRAL FRONT FRAME EXTENSION	120	
AC8-99D	CALC'D BACK OF CAB TO REAR SUSP C/L (CA) 146.46 in		
AE4-99D	CALC'D FRAME LENGTH - OVERALL 355.35 in		
ZF1-99D	FRAME HEIGHT TOP FRONT UNLADEN 44.16 in		
ZF2-99D	FRAME HEIGHT TOP FRONT LADEN 41.1 in		
ZF3-99D	FRAME HEIGHT TOP REAR UNLADEN 43.4 in		
ZF4-99D	FRAME HEIGHT TOP REAR LADEN 40.98 in		
553-001	SQUARE END OF FRAME		
559-001	STANDARD WEIGHT ENGINE CROSSMEMBER		
561-001	STANDARD CROSSMEMBER BACK OF TRANSMISSION		
562-001	STANDARD MIDSHIP #1 CROSSMEMBER(S)	10	10
572-001	STANDARD REARMOST CROSSMEMBER		
565-001	STANDARD SUSPENSION CROSSMEMBER		20
568-001	STANDARD WEIGHT REAR SUSPENSION CROSSMEMBER		
Chassis Equipment			
025-001	UNPOLISHED ALUMINUM WST EQUIPMENT COVERS		
556-997	OMIT FRONT BUMPER, CUSTOMER INSTALLED SPECIAL BUMPER, DOES NOT COMPLY WITH FMCSR 393.203	-60	
586-015	FRONT ANTI-SPRAY CAB MOUNTED MUDFLAPS		
558-065	FRONT TOW HOOKS - FRONT FRAME EXTENSION MOUNTED		
574-998	NO LICENSE PLATE MOUNTING		
551-002	HUCK-SPIN ROUND COLLAR CHASSIS FASTENERS		
44Z-002	EXTERIOR HARNESSES WRAPPED IN ABRASION TAPE		
Fuel Tanks			
204-154	80 GALLON/302 LITER ALUMINUM FUEL TANK - LH	10	

Prepared For :
GREG EDDINGTON
BOONE COUNTY ROAD AND BRIDGE
5551 S TOM BASS RD
COLUMBIA, MO 65201
UNITED STATES
Phone :573-449-8515

Prepared by:
Mike Talleur
PREMIER TRUCK GROUP OF COLUMBIA
1660 JADE ROAD
COLUMBIA, MO 65201
Phone :1-573-886-0429

Data Code	Description	Weight Front	Weight Rear
218-006	25 INCH DIAMETER FUEL TANK(S)		
215-005	PLAIN ALUMINUM/PAINTED STEEL FUEL/HYDRAULIC TANK(S) WITH PAINTED BANDS		
212-007	FUEL TANK(S) FORWARD		
664-001	PLAIN STEP FINISH		
205-001	FUEL TANK CAP(S)		
216-020	EQUIFLO INBOARD FUEL SYSTEM		
202-016	HIGH TEMPERATURE REINFORCED NYLON FUEL LINE		
Tires			
093-1YU	CONTINENTAL HAU 3 WT 315/80R22.5 20 PLY RADIAL FRONT TIRES	100	
094-12V	CONTINENTAL HDR2+ 11R22.5 16 PLY RADIAL REAR TIRES		184
Wheels			
502-433	ACCURIDE 29039 22.5X9.00 10-HUB PILOT 5.25 INSET 5-HAND STEEL DISC FRONT WHEELS	66	
505-428	ACCURIDE 28828 22.5X8.25 10-HUB PILOT 2-HAND HD STEEL DISC REAR WHEELS		104
496-011	FRONT WHEEL MOUNTING NUTS		
497-011	REAR WHEEL MOUNTING NUTS		
498-011	NYLON WHEEL GUARDS FRONT AND REAR ALL INTERFACES		
Cab Exterior			
829-053	111.6 INCH BBC CONVENTIONAL ALUMINUM CAB		
82A-028	STAINLESS STEEL CAB ACCENT MOLDING		
667-001	FRONT FENDERS		
754-017	BOLT-ON MOLDED FLEXIBLE FENDER EXTENSIONS	10	
678-066	INTERIOR GRAB HANDLES WITH ADDED LOWER LH AND RH A PILLAR GRAB HANDLES AND LH AND RH EXTERIOR NON-SLIP GRAB HANDLES		
65X-009	BRIGHT HOOD MOUNTED AIR INTAKE GRILLE, BLACK SCREEN		

Prepared For :
GREG EDDINGTON
BOONE COUNTY ROAD AND BRIDGE
5551 S TOM BASS RD
COLUMBIA, MO 65201
UNITED STATES
Phone :573-449-8515

Prepared by:
Mike Talleur
PREMIER TRUCK GROUP OF COLUMBIA
1660 JADE ROAD
COLUMBIA, MO 65201
Phone :1-573-886-0429

Data Code	Description	Weight Front	Weight Rear
640-016	X-SERIES STEEL REINFORCED ALUMINUM CAB		
644-048	X-SERIES VOCATIONAL HOOD		
67U-001	HOOD OPENING ASSIST WITH LOCKING STRUT		
652-016	WESTERN STAR NAMEPLATES		
727-1AY	SINGLE AIR HORN UNDER LH DECK	-4	
726-001	SINGLE ELECTRIC HORN		
575-001	REAR LICENSE PLATE MOUNT END OF FRAME		
650-008	AIR CAB MOUNTING		
312-095	DUAL STAGE INTELLIGENT LED HEADLIGHTS WITH HEATED LENS SYSTEM		
302-072	ROOF MOUNTED LED MARKER LIGHTS		
314-824	WIRING AND SWITCH FOR CUSTOMER FURNISHED SNOW PLOW LAMPS WITH DUAL CONNECTIONS AT BUMPER		
311-001	DAYTIME RUNNING LIGHTS		
294-107	INTEGRAL LED STOP/TAIL/BACKUP LIGHTS WITH 7 EXTRA FEET OF WIRE MOUNTED END OF FRAME		5
300-043	LED SIDE TURN SIGNAL		
744-106	C-BAR MIRROR SYSTEM WITH DUAL HEATED MIRRORS WITH INTEGRAL HEATED CONVEX, DUAL REMOTE, STAINLESS STEEL BACK COVER, AND BLACK C-BAR		
796-001	102 INCH EQUIPMENT WIDTH		
743-209	LH AND RH CONVEX MIRRORS INTEGRAL WITH PRIMARY MIRRORS		
74A-001	RH DOWN VIEW MIRROR		
729-001	STANDARD SIDE/REAR REFLECTORS		
677-098	UNPOLISHED ALUMINUM WST AFTERTREATMENT SYSTEM COVER		
776-998	NO SLEEPER VENT	-10	
768-064	SINGLE SOLAR TINTED REAR WINDOW, (1) 31 INCH X 20 INCH	-10	

Prepared For :
GREG EDDINGTON
BOONE COUNTY ROAD AND BRIDGE
5551 S TOM BASS RD
COLUMBIA, MO 65201
UNITED STATES
Phone :573-449-8515

Prepared by:
Mike Talleur
PREMIER TRUCK GROUP OF COLUMBIA
1660 JADE ROAD
COLUMBIA, MO 65201
Phone :1-573-886-0429

Data Code	Description	Weight Front	Weight Rear
663-032	1-PIECE ROPED-IN HEATED WINDSHIELD		
659-006	8 LITER (2 GAL) WINDSHIELD WASHER RESERVOIR, CAB MOUNTED, WITH FLUID LEVEL INDICATOR		
Cab Interior			
055-015	X-SERIES BASE INTERIOR TRIM LEVEL PACKAGE		
707-1C3	CHARCOAL BLACK VINYL BASE LEVEL INTERIOR		
70K-016	CARBON WITH BASE BLACK ACCENT		
772-001	BLACK MATS		
785-032	(1) DASH MOUNTED POWER OUTLET AND (1) DUAL USB-C CHARGING OUTPUT		
691-001	FORWARD ROOF MOUNTED CONSOLE		
693-019	LH AND RH DOOR STORAGE POCKETS INTEGRATED INTO MOLDED DOOR PANELS		
741-015	(2) COAT HOOKS ON BACKWALL OF CAB		
745-998	NO UPPER BUNK	-50	-50
738-021	DIGITAL ALARM CLOCK IN DRIVER DISPLAY		
720-072	2-1/2 LB. FIRE EXTINGUISHER SHIPPED LOOSE IN CAB	5	
170-045	STANDARD HEATER PLUMBING WITH BALL SHUTOFF VALVES AT SUPPLY LINES ONLY		
698-001	RADIATOR MOUNTED AIR CONDITIONER CONDENSER		
739-033	STANDARD INSULATION		
324-1B3	STANDARD LED CAB LIGHTING		
787-004	REMOTE KEYLESS ENTRY AND 2 TRANSMITTERS	2	
657-321	ALL UNIT(S) KEYED ALIKE WITH CUSTOMER SPECIFIED KEY NUMBER FT2024		
78G-004	KEY QUANTITY OF 4		
655-028	LH AND RH ELECTRIC DOOR LOCKS WITH AUTO UNLOCK FEATURE WHEN DOOR IS SET FROM OPEN TO CLOSED POSITION		
64C-003	BLACK DOOR HANDLES		

Prepared For :
GREG EDDINGTON
BOONE COUNTY ROAD AND BRIDGE
5551 S TOM BASS RD
COLUMBIA, MO 65201
UNITED STATES
Phone :573-449-8515

Prepared by:
Mike Talleur
PREMIER TRUCK GROUP OF COLUMBIA
1660 JADE ROAD
COLUMBIA, MO 65201
Phone :1-573-886-0429

Data Code	Description	Weight Front	Weight Rear
740-998	NO MATTRESS	-20	-15
722-002	TRIANGULAR REFLECTORS WITHOUT FLARES	10	
756-1J6	PREMIUM 2.0 HIGH BACK AIR SUSPENSION DRIVER SEAT WITH 2 AIR LUMBAR, INTEGRATED CUSHION EXTENSION, TILT AND ADJUSTABLE SHOCK	20	
760-1J6	PREMIUM 2.0 HIGH BACK AIR SUSPENSION PASSENGER SEAT WITH 2 AIR LUMBAR, INTEGRATED CUSHION EXTENSION, TILT AND ADJUSTABLE SHOCK	40	15
757-002	BLACK SUSPENSION COVER FOR DRIVER AND PASSENGER SEATS	4	
759-005	DUAL DRIVER AND PASSENGER SEAT ARMRESTS	8	
758-014	BLACK CORDURA PLUS CLOTH DRIVER SEAT COVER		
761-135	BLACK MORDURA CLOTH PASSENGER SEAT COVER WITH EMBROIDERED LOGO		
763-1AA	3 POINT ADJUSTABLE D-RING RETRACTOR DRIVER AND FIXED D-RING RETRACTOR PASSENGER SEAT BELTS		
532-002	ADJUSTABLE TILT AND TELESCOPING STEERING COLUMN		
540-044	4-SPOKE 18 INCH (450MM) BLACK STEERING WHEEL WITH SWITCHES		
765-002	DRIVER AND PASSENGER INTERIOR SUN VISORS		

Instruments & Controls

185-004	STANDARD FOOT PEDAL SYSTEM
106-002	ELECTRONIC ACCELERATOR CONTROL
870-001	BLACK GAUGE BEZELS
734-018	STANDARD CENTER INSTRUMENT PANEL
840-001	DUAL NEEDLE PRIMARY AND SECONDARY AIR PRESSURE GAUGE
198-025	INTAKE MOUNTED AIR RESTRICTION INDICATOR WITHOUT GRADUATIONS
149-015	ELECTRONIC CRUISE CONTROL WITH CONTROLS ON STEERING WHEEL SPOKES
156-007	KEY OPERATED IGNITION SWITCH AND INTEGRAL START POSITION; 4 POSITION OFF/RUN/START/ACCESSORY
811-044	PREMIUM INSTRUMENT CLUSTER WITH 5.0 INCH TFT COLOR DISPLAY

Prepared For :
GREG EDDINGTON
BOONE COUNTY ROAD AND BRIDGE
5551 S TOM BASS RD
COLUMBIA, MO 65201
UNITED STATES
Phone :573-449-8515

Prepared by:
Mike Talleur
PREMIER TRUCK GROUP OF COLUMBIA
1660 JADE ROAD
COLUMBIA, MO 65201
Phone :1-573-886-0429

Data Code	Description	Weight Front	Weight Rear
81B-003	DIGITAL PANEL LAMP DIMMER SWITCH IN DRIVER DISPLAY		
160-045	HEAVY DUTY ONBOARD DIAGNOSTICS INTERFACE CONNECTOR WITH DUST CAP LOCATED BELOW LH DASH		
844-001	2 INCH ELECTRIC FUEL GAUGE		
845-011	FUEL FILTER RESTRICTION INDICATOR		
148-072	ENGINE REMOTE INTERFACE WITH ONE OR MORE SET SPEEDS		
866-019	DIGITAL DUAL REAR AXLE TEMPERATURE IN DRIVER DISPLAY WITH SENSOR SHIELDS		
856-001	ELECTRICAL ENGINE COOLANT TEMPERATURE GAUGE		
854-001	ENGINE OIL TEMPERATURE GAUGE		
852-002	ELECTRIC ENGINE OIL PRESSURE GAUGE		
864-001	2 INCH TRANSMISSION OIL TEMPERATURE GAUGE		
867-004	ELECTRONIC OUTSIDE TEMPERATURE SENSOR DISPLAY IN DRIVER MESSAGE CENTER		
830-017	ENGINE AND TRIP HOUR METERS INTEGRAL WITHIN DRIVER DISPLAY		
372-123	PTO CONTROLS FOR ENHANCED VEHICLE ELECTRIC/ELECTRONIC ARCHITECTURE		
736-998	NO OBSTACLE DETECTION SYSTEM		
A87-998	NOT APPLICABLE - UNIT NOT SPEC'D WITH DETROIT ASSURANCE		
73K-998	NO SIDE OBJECT DETECTION SYSTEM		
72J-998	NO DR ASSIST SYSTEM		
49B-004	ELECTRONIC STABILITY CONTROL		
73B-998	NO LANE DEPARTURE WARNING SYSTEM		
73H-998	NO CAMERA/VIDEO/IMAGING SYSTEM		
35M-010	1 QUICKFIT PROGRAMABLE MODULE (QPM/XMC)	10	
6TS-005	TMC RP1226 ACCESSORY CONNECTOR LOCATED BEHIND PASSENGER SIDE REMOVEABLE DASH PANEL		

Prepared For :
GREG EDDINGTON
BOONE COUNTY ROAD AND BRIDGE
5551 S TOM BASS RD
COLUMBIA, MO 65201
UNITED STATES
Phone :573-449-8515

Prepared by:
Mike Talleur
PREMIER TRUCK GROUP OF COLUMBIA
1660 JADE ROAD
COLUMBIA, MO 65201
Phone :1-573-886-0429

Data Code	Description	Weight Front	Weight Rear
746-143	7" B-PANEL INTERACTIVE TOUCHSCREEN DISPLAY RADIO W/ USB-C, APPLE CARPLAY, ANDROID AUTO, BLUETOOTH/AM/FM/SXM/WB, WITH MICROPHONE		
747-001	DASH MOUNTED RADIO		
750-041	STANDARD SPEAKER SYSTEM		
753-998	NO AM/FM RADIO ANTENNA		
748-006	POWER AND GROUND WIRING PROVISION OVERHEAD		
749-001	ROOF/OVERHEAD CONSOLE CB RADIO PROVISION		
751-001	SINGLE REMOTE SPEAKER WITH LEAD FOR 2-WAY RADIO		
752-004	SINGLE FIBERGLASS LH MIRROR MOUNTED CB ANTENNA WITH BRACKET AND LEAD		
75W-001	HEADLINER MULTI-BAND ANTENNA: AM/FM/WEATHERBAND, WIFI/BLUETOOTH, GNSS/GPS		
78C-003	INTEROPERABLE SDAR ANTENNA		
810-027	ELECTRONIC MPH SPEEDOMETER WITH SECONDARY KPH SCALE, WITHOUT ODOMETER		
812-032	ELECTRONIC 2500 RPM TACHOMETER		
813-1C8	DETROIT CONNECT PLATFORM HARDWARE		
8D1-215	5 YEARS DETROIT CONNECT BASE PACKAGE(FEATURES VARY BY MODEL) DETROIT CONNECT PLATFORM		
162-002	IGNITION SWITCH CONTROLLED ENGINE STOP		
329-131	TWO EXTRA HARDWIRED SWITCHES IN DASH, ROUTE TO BETWEEN SEATS, BLUNTCUT		
4C1-007	HARDWIRE SWITCH #1,ON/OFF/ON LATCHING, 20 AMPS IGNITION POWER		
4C2-026	HARDWIRE SWITCH #2, ON/OFF LATCHING, 10 AMPS BATTERY POWER		
81Y-005	PRE-TRIP INSPECTION FEATURE FOR EXTERIOR LAMPS ONLY		
482-001	STANDARD TRACTOR PROTECTION VALVE		
883-001	TRAILER HAND CONTROL BRAKE VALVE	2	
842-006	DIGITAL TURBO AIR PRESSURE IN DRIVER DISPLAY		

Prepared For :
GREG EDDINGTON
BOONE COUNTY ROAD AND BRIDGE
5551 S TOM BASS RD
COLUMBIA, MO 65201
UNITED STATES
Phone :573-449-8515

Prepared by:
Mike Talleur
PREMIER TRUCK GROUP OF COLUMBIA
1660 JADE ROAD
COLUMBIA, MO 65201
Phone :1-573-886-0429

Data Code	Description	Weight Front	Weight Rear
836-015	DIGITAL VOLTAGE DISPLAY INTEGRAL WITH DRIVER DISPLAY		
304-030	ROTARY HEADLAMP SWITCH, MARKER LIGHTS/HEADLIGHTS SWITCH WITH PULL OUT FOR OPTIONAL FOG/ROAD LAMPS		
882-004	TWO VALVE PARKING BRAKE SYSTEM WITH WARNING INDICATOR		
299-020	SELF CANCELING TURN SIGNAL SWITCH WITH DIMMER, HEADLAMP FLASH, WASH/WIPE/INTERMITTENT		
48H-004	QUICKFIT POWERTRAIN INTERFACE CONNECTOR UNDER CAB WITH BLUNTCUTS		
4CH-005	5 EXTRA PROGRAMMABLE SWITCHES/INDICATORS		
48C-004	QUICKFIT PROGRAMMABLE INTERFACE CONNECTOR(S) UNDER CAB WITH BLUNTCUTS		
Design			
065-000	PAINT: ONE SOLID COLOR		
Color			
980-5AA	CAB COLOR A: L2745EY VERMILLION ELITE EY		
986-020	BLACK, HIGH SOLIDS POLYURETHANE CHASSIS PAINT		
962-972	POWDER WHITE (N0006EA) FRONT WHEELS/RIMS (PKWHT21, TKWHT21, W, TW)		
966-972	POWDER WHITE (N0006EA) REAR WHEELS/RIMS (PKWHT21, TKWHT21, W, TW)		
Certification / Compliance			
996-001	U.S. FMVSS CERTIFICATION, EXCEPT SALES CABS AND GLIDER KITS		

TOTAL VEHICLE SUMMARY

Weight Summary

	Weight Front	Weight Rear	Total Weight
Factory Weight+	9798 lbs	8976 lbs	18774 lbs
Total Weight+	9798 lbs	8976 lbs	18774 lbs

Prepared For :
GREG EDDINGTON
BOONE COUNTY ROAD AND BRIDGE
5551 S TOM BASS RD
COLUMBIA, MO 65201
UNITED STATES
Phone :573-449-8515

Prepared by:
Mike Talleur
PREMIER TRUCK GROUP OF COLUMBIA
1660 JADE ROAD
COLUMBIA, MO 65201
Phone :1-573-886-0429

Other Factory Charges

R27-001	MY27 ESCALATOR
PAT-023	STEEL, ALUMINUM, AND CHINA TARIFF IMPACT FEE 47X/49X
RD1-215	5 YR DETROIT CONNECT CORE PACKAGE -DETROIT CONNECT PLATFORM
RD3-998	NO SAFETY EVENT VIEWER
P73-2WS	STANDARD DESTINATION CHARGE

Extended Warranty

WAI-8XR	EXT ULTIMATE DETROIT ENGINE: DD13/DD15 5 YEARS/200,000 MILES/322,000 KM. FEX APPLIES
WAK-140	ALLISON 4500 RDS SERIES TRANSMISSION EXTENDED WARRANTY, 5 YEARS/UNLIMITED MILES FEX
WAG-078	TOWING: 5 YEARS/UNLIMITED MILES/KM EXTENDED TOWING COVERAGE $750 CAP FEX APPLIES

(+) Weights Shown are estimates only.
If weight is critical, contact Customer Application Engineering.

(**) Prices shown do not include taxes, fees, etc… "Net Equipment Selling Price" is located on the Quotation Details Proposal Report.

(***) All cost increases for major components (Engines, Transmissions, Axles, Front and Rear Tires) and government mandated requirements, tariffs, and raw material surcharges will be passed through and added to factory invoices.

Prepared For :
GREG EDDINGTON
BOONE COUNTY ROAD AND BRIDGE
5551 S TOM BASS RD
COLUMBIA, MO 65201
UNITED STATES
Phone :573-449-8515

Prepared by:
Mike Talleur
PREMIER TRUCK GROUP OF COLUMBIA
1660 JADE ROAD
COLUMBIA, MO 65201
Phone :1-573-886-0429

DIMENSIONS

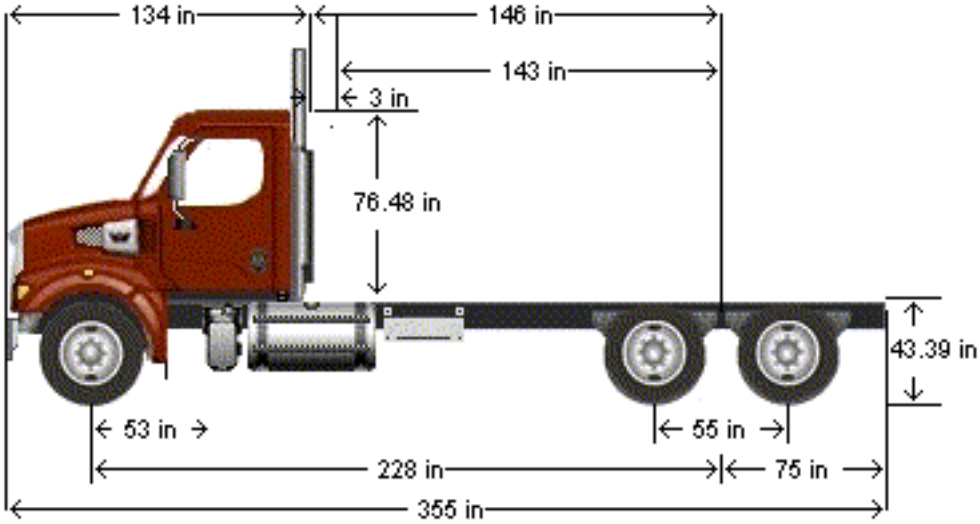

VEHICLE SPECIFICATIONS SUMMARY - DIMENSIONS

Model	47X
Wheelbase (545)	5790MM (228 INCH) WHEELBASE, SFA ONLY
Rear Frame Overhang (552)	1900MM (75 INCH) REAR FRAME OVERHANG
Fifth Wheel (578)	NO FIFTH WHEEL
Mounting Location (577)	NO FIFTH WHEEL LOCATION
Maximum Forward Position (in)	0
Maximum Rearward Position (in)	0
Amount of Slide Travel (in)	0
Slide Increment (in)	0
Desired Slide Position (in)	0.0
Cab Size (829)	111.6 INCH BBC CONVENTIONAL ALUMINUM CAB
Sleeper (682)	NO SLEEPER BOX/SLEEPERCAB
Exhaust System (016)	RH OUTBOARD UNDER STEP MOUNTED HORIZONTAL AFTERTREATMENT SYSTEM ASSEMBLY WITH RH B-PILLAR MOUNTED VERTICAL TAILPIPE
Cab to Body Clearance (in)	3.0

Prepared For :
GREG EDDINGTON
BOONE COUNTY ROAD AND BRIDGE
5551 S TOM BASS RD
COLUMBIA, MO 65201
UNITED STATES
Phone :573-449-8515

Prepared by:
Mike Talleur
PREMIER TRUCK GROUP OF COLUMBIA
1660 JADE ROAD
COLUMBIA, MO 65201
Phone :1-573-886-0429

TABLE SUMMARY - DIMENSIONS

Dimensions	Inches
Bumper to Back of Cab (BBC)	134.2
Bumper to Centerline of Front Axle (BA)	52.7
Front Axle to Back of Cab (AC)	81.5
Min. Cab to Body Clearance (CB)	3.0
Back of Cab to Centerline of Rear Axle(s) (CA)	146.5
Effective Back of Cab to Centerline of Rear Axle(s) (Effective CA)	143.5
Back of Cab Protrusions (Exhaust/Intake) (CP)	2.0
Back of Cab Protrusions (Side Extenders/Trim Tab) (CP)	0.0
Back of Cab Protrusions (CNG Tank)	0.0
Back of Cab Clearance (CL)	3.0
Back of Cab to End of Frame	221.3
Cab Height (CH)	76.5
Wheelbase (WB)	228.0
Frame Overhang (OH)	74.8
Overall Frame Length	355.4
Overall Length (OAL)	355.5
Rear Axle Spacing	55.0
Unladen Frame Height at Centerline of Rear Axle	43.4

Performance calculations are estimates only. If performance calculations are critical, please contact Customer Application Engineering.

Prepared For :
GREG EDDINGTON
BOONE COUNTY ROAD AND BRIDGE
5551 S TOM BASS RD
COLUMBIA, MO 65201
UNITED STATES
Phone :573-449-8515

Prepared by:
Mike Talleur
PREMIER TRUCK GROUP OF COLUMBIA
1660 JADE ROAD
COLUMBIA, MO 65201
Phone :1-573-886-0429

SWITCH SELECTOR - 4CH - DASH PANEL

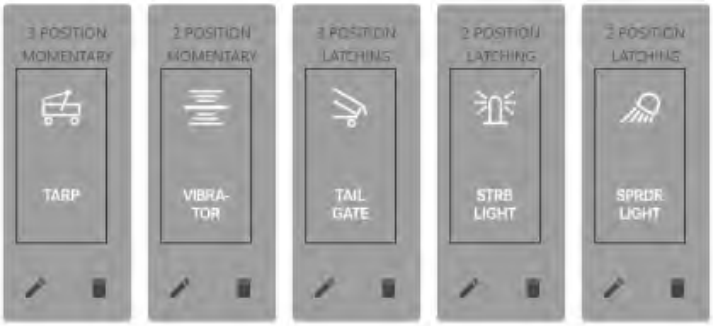

Prepared For :
GREG EDDINGTON
BOONE COUNTY ROAD AND BRIDGE
5551 S TOM BASS RD
COLUMBIA, MO 65201
UNITED STATES
Phone :573-449-8515

Prepared by:
Mike Talleur
PREMIER TRUCK GROUP OF COLUMBIA
1660 JADE ROAD
COLUMBIA, MO 65201
Phone :1-573-886-0429

SWITCH SELECTOR - 4Cx - HARDWIRED SWITCHES

switch #1	switch #2	switch #3	switch #4
4C1-007	4C2-026		

Prepared For :
GREG EDDINGTON
BOONE COUNTY ROAD AND BRIDGE
5551 S TOM BASS RD
COLUMBIA, MO 65201
UNITED STATES
Phone :573-449-8515

Prepared by:
Mike Talleur
PREMIER TRUCK GROUP OF COLUMBIA
1660 JADE ROAD
COLUMBIA, MO 65201
Phone :1-573-886-0429

SWITCH SELECTOR - 4CG - AUXILIARY PANEL

Ver 4/25

Purchase Agreement and Acknowledgement

Premier Truck Group of Columbia
1660 Jade Road
Columbia MO 65201
Phone: (573) 886-0188

Department: NEW
Contract Date: 06/18/2026
Deal Packet: DE-73301
Branch: 809
Salesperson: Mike Talleur

Bill To: 809851500
BOONE COUNTY ROAD & BRIDGE
5551 S TOM BASS RD
COLUMBIA MO 65201-9707
P:(573) 449-8515

Ship To:
BOONE COUNTY ROAD & BRIDGE
5551 S TOM BASS RD
COLUMBIA, MO 65201-9707

Stock#:TRK 1 VIN: New 2027 WESTERN STAR 47X Price: $157,781.00
DOC FEE CREDIT $-400.00
EXT ULTIMATE DETROIT ENGINE: DD13/DD15 5 YEARS/200,000 MILES
TOWING: 5 YEARS/UNLIMITED MILES/KM EXTENDED TOWING COVERAGE $750 CAP
ALLISON 4500 RDS SERIES TRANSMISSION EXTENDED WARRANTY, 5 YEARS

Per Unit: $157,381.00

Stock#:TRK 2 VIN: New 2027 WESTERN STAR 47X Price: $157,781.00
EXT ULTIMATE DETROIT ENGINE: DD13/DD15 5 YEARS/200,000 MILES
ALLISON 4500 RDS SERIES TRANSMISSION EXTENDED WARRANTY, 5 YEARS
TOWING: 5 YEARS/UNLIMITED MILES/KM EXTENDED TOWING COVERAGE $750 CAP

Stock#:TRK 3 VIN: New 2027 WESTERN STAR 47X Price: $157,781.00
ALLISON 4500 RDS SERIES TRANSMISSION EXTENDED WARRANTY, 5 YEARS
EXT ULTIMATE DETROIT ENGINE: DD13/DD15 5 YEARS/200,000 MILES
TOWING: 5 YEARS/UNLIMITED MILES/KM EXTENDED TOWING COVERAGE $750 CAP

Total Price	**$472,943.00**
Documentary Fee	$400.00
Total	**$473,343.00**
Net Total	**$473,343.00**

Prices subject to change and may include surcharges/fees relating to raw material prices, tariffs, or government mandated requirements (see attached Terms and Conditions). License & Registration costs are not included. Initials:

A DOCUMENTARY FEE IS NOT AN OFFICIAL FEE. A DOCUMENTARY FEE IS NOT REQUIRED BY LAW, BUT MAY BE CHARGED TO PURCHASERS FOR HANDLING DOCUMENTS RELATING TO THE SALE. A DOCUMENTARY FEE MAY NOT EXCEED A REASONABLE AMOUNT AGREED TO BY THE PARTIES.
THIS NOTICE IS REQUIRED BY LAW.

The Dealer's Inventory Tax charge is intended to reimburse the Dealer for ad valorem taxes on its motor vehicle inventory. The charge, which is paid by the Dealer to the county tax assessor-collector, is not a tax imposed on a Purchaser by the government, and is not required to be charged by the Dealer to the Purchaser.

THE UNDERSIGNED PURCHASER HEREBY OFFERS TO PURCHASE FROM YOU, THE DEALER, FOR THE STATED PRICE THE NEW VEHICLE(S) DESCRIBED HEREIN, SUBJECT TO THE TERMS AND CONDITIONS SET FORTH IN THIS PURCHASE AGREEMENT AND ACKNOWLEDGEMENT.

IMPORTANT: Read additional Terms and Conditions attached to this agreement.

EXECUTED BY THE PARTIES IN DUPLICATE, ONE COPY OF WHICH HAS BEEN DELIVERED TO THE PURCHASER WHO ACKNOWLEDGES AND ACCEPTS, SUBJECT TO LIMITED WARRANTY, WARRANTY DISCLAIMER AND LIMITATIONS OF LIABILITY AS SHOWN ON THE NEW VEHICLE OWNER'S WARRANTY REGISTRATION FORM.

Your business is always appreciated!

PURCHASER'S SIGNATURE TITLE DATE ACCEPTED BY

CO-SIGNER'S SIGNATURE TITLE DATE AUTHORIZED SIGNATURE

VENUE: It is agreed that this agreement is entered into in the State of Texas and is governed by the laws of the State of Texas.

Ver 4/25

Purchase Agreement and Acknowledgement

Premier Truck Group of Columbia
1660 Jade Road
Columbia MO 65201
Phone: (573) 886-0188

Department: NEW
Contract Date: 06/18/2026
Deal Packet: DE-73301
Branch: 809
Salesperson: Mike Talleur

Bill To: 809851500
BOONE COUNTY ROAD & BRIDGE
5551 S TOM BASS RD
COLUMBIA MO 65201-9707
P:(573) 449-8515

Ship To:
BOONE COUNTY ROAD & BRIDGE
5551 S TOM BASS RD
COLUMBIA, MO 65201-9707

BOONE COUNTY SPEC IN LIEU OF MODOT
SOLICITATION# 60526CO0244

UPDATED PRICING WITH NEW TARIFF CHARGE

Prices subject to change and may include surcharges/fees relating to raw material prices, tariffs, or government mandated requirements (see attached Terms and Conditions). License & Registration costs are not included. Initials:

A DOCUMENTARY FEE IS NOT AN OFFICIAL FEE. A DOCUMENTARY FEE IS NOT REQUIRED BY LAW, BUT MAY BE CHARGED TO PURCHASERS FOR HANDLING DOCUMENTS RELATING TO THE SALE. A DOCUMENTARY FEE MAY NOT EXCEED A REASONABLE AMOUNT AGREED TO BY THE PARTIES.
THIS NOTICE IS REQUIRED BY LAW.

The Dealer's Inventory Tax charge is intended to reimburse the Dealer for ad valorem taxes on its motor vehicle inventory. The charge, which is paid by the Dealer to the county tax assessor-collector, is not a tax imposed on a Purchaser by the government, and is not required to be charged by the Dealer to the Purchaser.

THE UNDERSIGNED PURCHASER HEREBY OFFERS TO PURCHASE FROM YOU, THE DEALER, FOR THE STATED PRICE THE NEW VEHICLE(S) DESCRIBED HEREIN, SUBJECT TO THE TERMS AND CONDITIONS SET FORTH IN THIS PURCHASE AGREEMENT AND ACKNOWLEDGEMENT.

IMPORTANT: Read additional Terms and Conditions attached to this agreement.

EXECUTED BY THE PARTIES IN DUPLICATE, ONE COPY OF WHICH HAS BEEN DELIVERED TO THE PURCHASER WHO ACKNOWLEDGES AND ACCEPTS, SUBJECT TO LIMITED WARRANTY, WARRANTY DISCLAIMER AND LIMITATIONS OF LIABILITY AS SHOWN ON THE NEW VEHICLE OWNER'S WARRANTY REGISTRATION FORM.

Your business is always appreciated!

PURCHASER'S SIGNATURE TITLE DATE

ACCEPTED BY

CO-SIGNER'S SIGNATURE TITLE DATE

AUTHORIZED SIGNATURE

VENUE: It is agreed that this agreement is entered into in the State of Texas and is governed by the laws of the State of Texas.

Purchase Agreement Terms and Conditions

1. TRADE(S). Purchaser shall deliver trade(s) in the same condition as at time of inspection and appraisal by Dealer, other than reasonable wear and tear, except as disclosed in this Agreement. Purchaser represents that each truck shall be free and clear of all liens and encumbrances and warrants that the trade(s) be that type and condition described in this Agreement, including attachments hereto.

2. PRICING. If after the date of this Agreement, the manufacturer of a vehicle set forth above ("Vehicle") imposes any increase in the price of any Vehicle or imposes any surcharges, incremental fees or other increases to the factory invoices (whether relating to commodities, government mandated requirements, raw materials, tariffs, or otherwise), Dealer may make corresponding changes to the Pricing set forth above for the affected Vehicle and Purchaser shall be responsible for paying any applicable surcharges, fees or other increases. As a result, Purchaser acknowledges that the total prices for vehicles not in stock are estimated.

3. TERMS OF PAYMENT. Unless otherwise agreed, net payment shall be due on delivery. Late payments shall bear interest at the rate of 18% per annum, or the maximum permitted under law, whichever is less. If acceptance of delivery is delayed by Purchaser, payment shall become due on the date when Dealer is prepared to deliver. If the financial condition of Purchaser at any time does not, in the judgment of Dealer, justify continuance of the work to be performed by Dealer hereunder on the terms of payment as agreed upon, Dealer may suspend such work, or postpone delivery, and require such assurances of Purchaser's performance as Dealer deems adequate, including payment in advance, or Dealer may cancel this order and shall receive reimbursement for its reasonable and proper cancellation charges. In the event of bankruptcy or insolvency of Purchaser, voluntary or involuntary, Dealer shall be entitled to cancel any order then outstanding at any time and seek reimbursement for its reasonable and proper cancellation charges.

4. CANCELLATION. Purchaser may cancel this order only if Dealer is able to cancel said order with the manufacturer, and only upon written notice. Upon any cancellation or failure to accept delivery, Purchaser shall pay Dealer reasonable and proper cancellation charges and expenses.

5. TRANSFER LIMITATION.Purchaser represents and warrants that it is the intended end user of the Vehicle(s). Purchase further represents and warrants that the Vehicle(s), for a period of 12 months from the date of deliver of the Vehicle(s), will not be resold, re-leased, or otherwise transferred to another owner in any manner without the prior written consent of Dealer.

6. SALES AND OTHER TAXES. Unless otherwise specified herein, Dealer's price does not include federal excise, sales, use, or other taxes. Consequently, in addition to the price specified herein, the amount of any other excise, sales, use, or other tax applicable to the sale or use of the Vehicle(s) purchased hereunder shall be paid by Purchaser, or in lieu thereof, Purchaser shall provide Dealer with a tax exemption certificate acceptable to the taxing authorities.

7. DELIVERY. All Vehicle(s) furnished hereunder shall be delivered to Purchaser at the Dealer's dealership location or other location as designated in this Agreement. Unless otherwise provided, delivery will be made via carriers and routes designated by manufacturer with freight charges to be included in the purchase price. Delivery dates are approximate and are based upon receipt of all necessary information from Purchaser. Dealer shall not be liable for delays in delivery or manufacturing, or other causes beyond Dealer's control.

8. TECHNICAL CHANGES. Purchaser acknowledges that the manufacturer and Dealer reserve the right to change the specifications of the Vehicle(s) at any time without obligation to make such changes in other trucks previously delivered to Purchaser. In addition, manufacturer and Dealer reserve the right to make design changes and substitutions of materials subsequent to the receipt of the order which, in manufacturer's or Dealer's opinion, are necessary to improve the Vehicle. Purchaser agrees to accept any such changes as fulfillment of Dealer's obligations under this order.

9. REQUIRED EQUIPMENT. This order shall be deemed to include, whether or not specified herein, all equipment or accessories required by the National Highway Traffic Safety Act or other regulations in effect at the time of order receipt. It is agreed that any additional or different equipment not specified which is required at the time of delivery to meet the foregoing Act or other regulations will be added and the costs shall be paid by Purchaser.

10. TITLE AND REMEDIES. Until full payment by Purchaser of all amounts due hereunder, Dealer reserves the title to all Vehivle(s) furnished hereunder. If Purchaser defaults in payment or performance hereunder or becomes subject to insolvency, receivership, or bankruptcy proceedings, or makes an assignment for the benefit of creditors, or without the consent of Dealer voluntarily or involuntarily sells, transfers, leases, or permits any lien or attachment on the Vehicle(s) delivered hereunder, Dealer may treat all amounts then or thereafter owing hereunder by Purchaser as immediately due and payable (subject only to credits required by law) and Dealer may repossess said Vehicle by any means available by law and shall enjoy any and all other remedies of a secured creditor under the Uniform Commercial Code. Purchaser shall execute and deliver to Dealer such financing statements and other documents as Dealer may deem appropriate to evidence, perfect, and protect the priority of its security interest in the Vehicle(s) subject to this order.

11. GENERAL
    - Any assignment by Purchaser of this order or any rights hereunder, without written consent of Dealer, shall be void.
    - Clerical errors in this order may be automatically corrected by giving written notice thereof to Purchaser by a duly authorized representative of Dealer.
    - No waiver, alteration, or modification of any of the provisions hereof shall be binding unless and until in writing and signed by a duly authorized representative of Dealer.
    - To the extent not covered by other terms herein, including terms of warranty and limitation of liability, etc., the provisions of the Uniform Commercial Code shall govern this sale.
    - This Agreement (including by reference the provisions set out in manufacturers standard warranty or warranties) shall constitute the entire Agreement between Purchaser and Dealer, and no understandings or obligations not expressly set forth herein or in manufacturer's standard warranty or warranties are binding upon Purchaser or Dealer.
    - In the event that any provision of this Agreement is judicially deemed unenforceable under applicable law, the validity or enforceability of the remaining provisions will be interpreted, where possible, to sustain its legality and enforceability.

ALL WARRANTIES, IF ANY, BY A MANUFACTURER OR SUPPLIER OTHER THAN DEALER ARE THEIRS, NOT DEALER'S AND ONLY SUCH MANUFACTURER OR OTHER SUPPLIER SHALL BE LIABLE FOR PERFORMANCE UNDER SUCH WARRANTIES. DEALER HEREBY DISCLAIMS ALL WARRANTIES, EXPRESSED OR IMPLIED, INCLUDING ANY IMPLIED WARRANTIES OF MERCHANTABILITY OR FITNESS FOR A PARTICULAR PURPOSE.

Upon Dealer delivering or causing a Vehicle to be delivered to Purchaser, Purchaser assumes the entire risk of loss of, or damage to, such Vehicle from any and every cause whatsoever. Purchaser agrees to indemnify, defend, and hold harmless Dealer from and against any and all claims, actions, issues, costs (including resonable attorney's fees) and liabilities (including without limitation Dealer's negligence) arising out of : (a) Purchaser's or others' use of the Vehicle(s) after Purchasr takes possession thereof, or (b) any injuries suffered by Purchaser's employees or drivers related to the Vehicle(s).

The Purchaser Agrees to the Terms and Conditions and Warranty Acknowledgement Listed Above: Initials: _____

PTG/SL-207-2-S (04/2025)

Trade Terms and Conditions

DOCUMENTATION:

- A valid certificate of title in the name of the Dealer must be provided with each vehicle being traded in.
- The above title must show all liens filed against the truck which can be verified at time of trade.
- A valid copy of Form 2290 (Federal Highway Use Tax) showing proof of payment of all past and current taxes must be provided with each vehicle.
- If major repairs have been performed recently, copies of invoices or repair orders will be required for repair verification to prospective purchaser.

TIRES, WHEELS & BRAKES:

- Matched tread steer tires will be required to have at least 50% (11/32") original tread depth with normal tread wear patterns.
- Matched tread drive tires must be: ☐ original tread only (no re-caps). ☐ Re-cap or original tread tires are acceptable.
- Matched tread drive tires will be required to have a minimum of 11/32" if original tread or 15/32" tread depth if recaps. Tires must exhibit even tread wear patterns.
- All tires and wheels must be of the same size and be capable of passing at State and Federal DOT inspections.
- Brakes must have a minimum of 50% lining remaining. Vehicle braking system must be capable of passing all State and Federal DOT inspections.

EXTERIOR CONDITION:

- Vehicle's cab, hood, bumper, and air fairings (top and side) should be free of damage. If damage exists, the maximum allowable (including paint) will be $250.00.
- All cab glass must be serviceable and capable of passing all State and Federal DOT inspections.
- Frame rails must be capable of passing all State and Federal DOT inspections.

INTERIOR CONDITION:

- Cab interior controls should be in good operating condition. Seats, carpet, and upholstery should be in good condition and show no more than normal wear and tear based on the age and mileage of the vehicle.

MECHANICAL COMPONENTS:

- Engine should be free from defects and oil leaks and be capable of passing a dynamometer test for power and blow by based on specific engine manufacturers published standards.
- Vehicles electrical, HVAC, and if applicable, auxiliary power unit (APU), should be in good working order.
- Transmission, clutch, drivelines, and rear axles should be in good working condition and be capable of passing all State and Federal DOT inspections.

PAYOFF ADJUSTMENTS:

- If the payoff balance of the trade(s) should exceed the approximate payoff amount used for this transaction, the Purchaser agrees to pay the difference between the approximate payoff and the actual payoff amount of the vehicle(s) traded. If the payoff balance of the trade(s) is less than the approximate payoff amount used for this transaction, the Dealer agrees to refund the difference to the Purchaser.

DELIVERY OF TRADE(S):

☐ The Purchaser will deliver the trade(s) to: _____

☐ The Dealer will pick up the trade(s) from: _____

- This transaction will not be complete unless the trade(s) has been received per the trade terms and conditions listed above.
- The Terms of Payment conditions on Pg. 2, Section 2 of this Agreement will apply if the delivery of the trade(s) is late or delayed due to trade terms.
- Delivery of the new vehicle(s) will coincide with receipt of the trade(s) unless other delivery arrangements have been agreed to by both parties.

☐ Other delivery arrangements: _____

_____

The Purchaser Agrees to the Terms and Conditions and Warranty Acknowledgement Listed Above: Initials: ☐

Certificate Of Completion

Envelope Id: 1776044D-E6C7-8678-8245-C2B87C92C01A
Status: Sent
Subject: Complete with Docusign: MY27 DUMP TRUCK CURRENT CUSTOMER SPEC.pdf, DE-73301 NEW TARIFF.pdf
Source Envelope:
Document Pages: 27
Signatures: 0
Certificate Pages: 5
Initials: 0
AutoNav: Enabled
EnvelopeId Stamping: Disabled
Time Zone: (UTC-06:00) Central Time (US & Canada)

Envelope Originator:
Mike Talleur
mtalleur@premiertruck.com
IP Address: 63.78.144.98

Record Tracking

Status: Original
6/18/2026 9:14:45 AM

Holder: Mike Talleur
mtalleur@premiertruck.com

Location: DocuSign

Signer Events	Signature	Timestamp
ROBERT SAPP RSAPP@BOONECOUNTYMO.ORG Security Level: Email, Account Authentication (None) **Electronic Record and Signature Disclosure:** Accepted: 6/22/2026 3:18:35 PM ID: c2bafe41-cdd8-47c2-ba29-7e184625c6e8		Sent: 6/18/2026 9:41:13 AM Viewed: 6/22/2026 3:18:35 PM
AMY GERSKIN AGERSKIN@BOONEMO.GOV Security Level: Email, Account Authentication (None) **Electronic Record and Signature Disclosure:** Not Offered via Docusign		
PATRICK JOHNSON PJOHNSON@PREMIERTRUCK.COM Security Level: Email, Account Authentication (None) **Electronic Record and Signature Disclosure:** Not Offered via Docusign		

In Person Signer Events	Signature	Timestamp

Editor Delivery Events	Status	Timestamp

Agent Delivery Events	Status	Timestamp

Intermediary Delivery Events	Status	Timestamp

Certified Delivery Events	Status	Timestamp

Carbon Copy Events	Status	Timestamp

Witness Events	Signature	Timestamp

Notary Events	Signature	Timestamp

Envelope Summary Events	Status	Timestamps
Envelope Sent	Hashed/Encrypted	6/18/2026 9:41:13 AM
Envelope Updated	Security Checked	6/18/2026 9:56:28 AM
Envelope Updated	Security Checked	6/18/2026 9:56:28 AM

Envelope Summary Events	Status	Timestamps
Envelope Updated	Security Checked	6/18/2026 9:56:28 AM
Envelope Updated	Security Checked	6/18/2026 11:59:48 AM
Envelope Updated	Security Checked	6/18/2026 11:59:48 AM
Envelope Updated	Security Checked	6/18/2026 11:59:48 AM

Payment Events	Status	Timestamps

Electronic Record and Signature Disclosure

ELECTRONIC RECORD AND SIGNATURE DISCLOSURE

From time to time, Premier Truck Group (we, us or Company) may be required by law to provide to you certain written notices or disclosures. Described below are the terms and conditions for providing to you such notices and disclosures electronically through the DocuSign system. Please read the information below carefully and thoroughly, and if you can access this information electronically to your satisfaction and agree to this Electronic Record and Signature Disclosure (ERSD), please confirm your agreement by selecting the check-box next to 'I agree to use electronic records and signatures' before clicking 'CONTINUE' within the DocuSign system.

Getting paper copies

At any time, you may request from us a paper copy of any record provided or made available electronically to you by us. You will have the ability to download and print documents we send to you through the DocuSign system during and immediately after the signing session and, if you elect to create a DocuSign account, you may access the documents for a limited period of time (usually 30 days) after such documents are first sent to you. After such time, if you wish for us to send you paper copies of any such documents from our office to you, you will be charged a $0.00 per-page fee. You may request delivery of such paper copies from us by following the procedure described below.

Withdrawing your consent

If you decide to receive notices and disclosures from us electronically, you may at any time change your mind and tell us that thereafter you want to receive required notices and disclosures only in paper format. How you must inform us of your decision to receive future notices and disclosure in paper format and withdraw your consent to receive notices and disclosures electronically is described below.

Consequences of changing your mind

If you elect to receive required notices and disclosures only in paper format, it will slow the speed at which we can complete certain steps in transactions with you and delivering services to you because we will need first to send the required notices or disclosures to you in paper format, and then wait until we receive back from you your acknowledgment of your receipt of such paper notices or disclosures. Further, you will no longer be able to use the DocuSign system to receive required notices and consents electronically from us or to sign electronically documents from us.

All notices and disclosures will be sent to you electronically

Unless you tell us otherwise in accordance with the procedures described herein, we will provide electronically to you through the DocuSign system all required notices, disclosures, authorizations, acknowledgements, and other documents that are required to be provided or made available to you during the course of our relationship with you. To reduce the chance of you inadvertently not receiving any notice or disclosure, we prefer to provide all of the required notices and disclosures to you by the same method and to the same address that you have given us. Thus, you can receive all the disclosures and notices electronically or in paper format through the paper mail delivery system. If you do not agree with this process, please let us know as described below. Please also see the paragraph immediately above that describes the consequences of your electing not to receive delivery of the notices and disclosures electronically from us.

How to contact Premier Truck Group:

You may contact us to let us know of your changes as to how we may contact you electronically, to request paper copies of certain information from us, and to withdraw your prior consent to receive notices and disclosures electronically as follows:
To contact us by email send messages to: dnolin@premiertruck.com

To advise Premier Truck Group of your new email address

To let us know of a change in your email address where we should send notices and disclosures electronically to you, you must send an email message to us at dnolin@premiertruck.com and in the body of such request you must state: your previous email address, your new email address. We do not require any other information from you to change your email address.

If you created a DocuSign account, you may update it with your new email address through your account preferences.

To request paper copies from Premier Truck Group

To request delivery from us of paper copies of the notices and disclosures previously provided by us to you electronically, you must send us an email to dnolin@premiertruck.com and in the body of such request you must state your email address, full name, mailing address, and telephone number. We will bill you for any fees at that time, if any.

To withdraw your consent with Premier Truck Group

To inform us that you no longer wish to receive future notices and disclosures in electronic format you may:

Docusign Envelope ID: FFB00063-5087-8929-8067-CE06E5864C59

i. decline to sign a document from within your signing session, and on the subsequent page, select the check-box indicating you wish to withdraw your consent, or you may;

ii. send us an email to dnolin@premiertruck.com and in the body of such request you must state your email, full name, mailing address, and telephone number. We do not need any other information from you to withdraw consent.. The consequences of your withdrawing consent for online documents will be that transactions may take a longer time to process..

Required hardware and software

The minimum system requirements for using the DocuSign system may change over time. The current system requirements are found here: https://support.docusign.com/guides/signer-guide-signing-system-requirements.

Acknowledging your access and consent to receive and sign documents electronically

To confirm to us that you can access this information electronically, which will be similar to other electronic notices and disclosures that we will provide to you, please confirm that you have read this ERSD, and (i) that you are able to print on paper or electronically save this ERSD for your future reference and access; or (ii) that you are able to email this ERSD to an email address where you will be able to print on paper or save it for your future reference and access. Further, if you consent to receiving notices and disclosures exclusively in electronic format as described herein, then select the check-box next to 'I agree to use electronic records and signatures' before clicking 'CONTINUE' within the DocuSign system.

By selecting the check-box next to 'I agree to use electronic records and signatures', you confirm that:

- You can access and read this Electronic Record and Signature Disclosure; and
- You can print on paper this Electronic Record and Signature Disclosure, or save or send this Electronic Record and Disclosure to a location where you can print it, for future reference and access; and
- Until or unless you notify Premier Truck Group as described above, you consent to receive exclusively through electronic means all notices, disclosures, authorizations, acknowledgements, and other documents that are required to be provided or made available to you by Premier Truck Group during the course of your relationship with Premier Truck Group.

Docusign Envelope ID: FFB00063-5087-8929-8067-CE06E5864C59

CCO Form: GS01
Approved: 02/93 (TLP)
Revised: 04/24 (RSV) PROJECT: MODOT 0000000008SL,1
Modified:

MISSOURI HIGHWAYS AND TRANSPORTATION COMMISSION
CONTRACT AGREEMENT

THIS AGREEMENT is made and entered into by and between the Missouri Highways and Transportation Commission (hereinafter, "Commission") and Premier Truck Group of Columbia (hereinafter, "Contractor").

WITNESSETH:

NOW, THEREFORE, in consideration of the mutual promises, covenants, and representations contained herein, the parties agree as follows:

(1) CONSIDERATION: Consideration for this Agreement shall be the acceptance of the Contractor's bid and the award of this contract to the Contractor by the Commission.

(2) CONTRACTOR'S DUTIES: The Contractor shall furnish, at the Contractor's expense, MODOT 0000000008SL,1 MoDOT Statewide FY26 - Dump Truck 2027 Models - Multiple Award as set out in the Contractor's proposal which is attached to this document and incorporated into this Agreement. The Contractor shall supply those items designated in the Contractor's proposal for which the bid has been accepted, which are incorporated into this Agreement. The Contractor shall comply with all provisions of the proposal in the specifications which are attached to this Agreement, which are incorporated into this Agreement.

(3) LAW OF MISSOURI TO GOVERN: This Agreement shall be construed according to the laws of the state of Missouri. The Contractor shall comply with all local, state and federal laws and regulations relating to the performance of this Agreement.

(4) PAYMENT: The Commission agrees to pay the Contractor in a manner and in the amount(s) provided in the Contractor’s proposal MODOT 0000000008SL,1 MoDOT Statewide FY26 - Dump Truck 2027 Models - Multiple Award attached hereto and made part of this Agreement.

(6) AMENDMENTS: Any change in this Agreement, whether by modification or supplementation, must be accomplished by a formal contract amendment approved and signed by representatives of the Contractor and Commission, respectively, each of whom being duly authorized to execute the contract amendment on behalf of the Contractor and Commission, respectively.

(7) ASSIGNMENT: The Contractor shall not assign, transfer or delegate any interest in this Agreement without the prior written consent of the Commission.

(8) BANKRUPTCY: Upon filing for any bankruptcy or insolvency proceeding by or

Docusign Envelope ID: FFB00063-5087-8929-8067-CE06E5864C59

against the Contractor, whether voluntarily, or upon the appointment of a receiver, trustee, or assignee, for the benefit of creditors, the Commission reserves the right and sole discretion to either cancel the Agreement or affirm the Agreement and hold the Contractor responsible for damages.

(9) CANCELLATION: The Commission may cancel the Agreement at any time for a material breach of contractual obligations or for convenience by providing Contractor with written notice of cancellation. Should the Commission exercise its right to cancel the contract for such reasons, cancellation will become effective upon the date specified in the notice of cancellation sent to the Contractor.

(10) AUDIT OF RECORDS: Contractor must maintain all records relating to this Agreement, including but not limited to invoices, payrolls, etc. These records must be available at all reasonable times at no charge to the Commission and/or its designees or representatives during the period of this Agreement and any extension thereof, and for three (3) years from the date of final payment made under this Agreement.

(11) VENUE: It is agreed by the parties that any action at law, suit in equity, or other judicial proceeding to enforce or construe this Agreement, or respecting its alleged breach, shall be instituted only in the Circuit Court of Cole County, Missouri.

(13) CONTRACT PERIOD: The initial contract period is from date of contract award through October 31, 2026.

(15) WORKER AUTHORIZATION: Pursuant to Section 285.530, RSMo., no business entity or employer shall knowingly employ, hire for employment, or continue to employ an unauthorized alien to perform work within the State of Missouri. As a condition for the award of any contract or grant in excess of five thousand dollars by the State or by any political subdivision of the State to the Contractor shall:

(A) Enrollment in Federal Work Authorization Program: By sworn affidavit and provision of documentation, affirm its enrollment and participation in a federal work authorization program with respect to the employees working in connection with the contracted services. E-Verify is an example of a federal work authorization program. The Contractor affirms its enrolment and participation in the E-Verify federal work authorization program with respect to the employees proposed to work in connection with the services requested herein by providing acceptable enrollment and participation documentation consisting of completed copy of the E-Verify Memorandum of Understanding (MOU). If the Contractor is not already enrolled and participating in a federal work authorization program, E-Verify is available at http://www.dhs.gov/xprevprot/programs/gc_1185221678150.shtm.

(B) Annual Workers Eligibility Affidavit: By sworn affidavit, affirm that it does not knowingly employ any person who is an unauthorized alien in connection with the contracted services.

(16) PROOF OF LAWFUL PRESENCE FOR SOLE PROPRIETORSHIPS AND PARTNERSHIPS: If the business entity is a sole proprietorship or partnership, pursuant to Section 208.009, RSMo., each sole proprietor and each general partner shall provide

Docusign Envelope ID: FFB00063-5087-8929-8067-CE06E5864C59

affirmative proof of lawful presence in the United States. Such sole proprietorship or partnership is eligible for temporary public benefits upon submission by each sole proprietor and general partner of a sworn affidavit of his/her lawful presence on the United States until such lawful presence is affirmatively determined, or as otherwise provided by Section 208.009, RSMo.

(17) AUTHORITY TO EXECUTE: The signers of this Agreement warrant that they are acting officially and properly on behalf of their respective institutions and have been duly authorized, directed and empowered to execute this Agreement.

(18) INDEMNIFICATION: The Contractor shall defend, indemnify and hold harmless the Commission, including its members and department employees, from any claim or liability whether based on a claim for damages to real or personal property or to a person for any matter relating to or arising out of the Contractor's performance of its obligations under this Agreement.

(19) INSURANCE REQUIREMENTS: The Contractor shall acquire and maintain adequate liability insurance in the form(s) and amount(s) sufficient to protect the MHTC, including its members and department employees, against any such loss, damage and/or expense related to performance under the contract. Self-insurance coverage or another alternative risk financing mechanism may be utilized provided that such coverage is verifiable and irrevocably reliable and the MHTC and the Missouri Department of Transportation are protected as an additional insured.

(A) General and other non-professional liability insurance shall include an endorsement that adds the MHTC and the Missouri Department of Transportation as an additional insured.

(B) In the event any insurance coverage is canceled, MHTC must be notified within forty-five (45) calendar days. The address for Additional Insured status on the certificate of insurance or endorsement shall be: MHTC/MoDOT, 105 W. Capitol Avenue, PO Box 270, Jefferson City, MO 65102.

(20) SOLE BENEFICIARY: This Agreement is made for the sole benefit of the parties hereto and nothing in this Agreement shall be construed to give any rights or benefits to anyone other than the Commission and the Contractor.

(21) COMMISSION REPRESENTATIVE: The Commission's General Services Fleet Manager is designated as the Commission's representative for the purpose of administering the provisions of this Agreement. The Commission's representative may designate by written notice other persons having the authority to act on behalf of the Commission in furtherance of the performance of this Agreement.

(22) ANTI-DISCRIMINATION AGAINST ISRAEL CERTIFICATION**:** By signing the contract, below, the Contractor certifies that it is not currently engaged in and shall not, for the duration of the contract, engage in a boycott of goods or services from the State of Israel, companies doing business in or with Israel or authorized by, licensed by, or organized under the laws of the State of Israel, or persons or entities doing business in the State of Israel as

Docusign Envelope ID: FFB00063-5087-8929-8067-CE06E5864C59

defined by Section 34.600 RSMo. This certification shall not apply to contracts with a total potential value of less than One Hundred Thousand Dollars ($100,000) or to contractors with fewer than ten (10) employees.

[Remainder of Page Intentionally Left Blank.]

Docusign Envelope ID: FFB00063-5087-8929-8067-CE06E5864C59

IN WITNESS WHEREOF, the parties have entered into this agreement on the date last written below.

Executed by the Contractor on 2026-03-03 | 8:41 AM CST (DATE).

Executed by the Commission on 2026-03-03 | 9:46 AM CST (DATE).

MISSOURI HIGHWAYS AND TRANSPORTATION COMMISSION

DocuSigned by:
Brenda J. Morris
560EEE380ADC47C...

By: _____

Title: Chief Financial Officer

ATTEST:

DocuSigned by:
7467BCDEFDFD4DE...

Secretary to the Commission

Approved as to Form:

DocuSigned by:
Jason D. Sacy
8183FA5D71B4415...

Commission Counsel

Premier Truck Group of Columbia

Signed by:
Mike Tallcur
3F9E0FCE885740E...

By: _____

Title: SALESMAN

ATTEST:

By: _____

Title: _____

(CORPORATE SEAL)

Docusign Envelope ID: FFB00063-5087-8929-8067-CE06E5864C59

State of Missouri

Missouri Department of Transportation

Responses are preferred to be submitted electronically via MissouriBUYS, powered by MOVERS.

ATTENTION:

1. After reviewing the solicitation, the vendor must complete and return **all necessary exhibits**.
2. Due to lead times for obtaining the information needed to complete the various **Business Compliance Exhibits** herein as explained in the solicitation's Supplier Response Exhibits, suppliers are encouraged to IMMEDIATELY begin securing these verifications.
3. The supplier must be registered in MissouriBUYS (Powered by MOVERS) **to be considered for contract award.**

INSTRUCTIONS:

1. From the Table of Contents on the left-hand side of this screen, navigate to the Contract Terms section and click the Download Contract button to review the solicitation terms in its entirety.
2. Navigate to the Lines and Requirements sections to review and download any available attachments.
3. Click Create Response to enter your response.

Docusign Envelope ID: FFB00063-5087-8929-8067-CE06E5864C59

Your response has been submitted to the following contact.

Company	**State of Missouri**
Buyer	**ASHTEN LORTS**
Location	
Phone	
Fax	
E-mail	**ASHTEN.LORTS@MODOT.MO.GOV**

Your information is

Your Company Name	**PREMIER TRUCK GROUP OF COLUMBIA**
Your Company Site	
Address	**1660 JADE RD** **COLUMBIA, MISSOURI BOONE65201**
Contact Details	**TALLEUR, MIKE**
Response Type	**Primary**
Response Valid Until	**09/30/2026 12:00 AM**
Response Status	**Active**

Docusign Envelope ID: FFB00063-5087-8929-8067-CE06E5864C59

Table of Contents

1 Overview....4
1.1 General Information....4
1.2 Terms....4
2 Requirements....5
2.1 Section 1. Cooperative Procurement....5
2.2 Section 2. DocuSign Information....5
2.3 Section 3. Single Point of Contact....5
2.4 Section 4. Dump Truck Pricing Sheet....5
2.5 Section 5. Estimated Delivery Time....5
2.6 Section 6. Replacement Parts....6
2.7 Section 7. Required Completed Documents....6
2.8 Section 8. Supplier Attachments....6
3 Lines....7
3.1 Line Information....7
3.2 Line Details....7
3.2.1 Line 1....7
4 Contract Terms....7

Docusign Envelope ID: FFB00063-5087-8929-8067-CE06E5864C59

1 Overview

1.1 General Information

Title	**MoDOT Statewide FY26 - Dump Truck 2027 Models - Multiple Award**
Synopsis	**This Invitation for Bid (IFB) seeks bids from qualified organizations to provide 2027 model year Dump Trucks (Single Axle, Tandem Axle, and Towplow) to the Missouri Department of Transportation (MoDOT). The award period shall commence from the date of contract award until October 31, 2026. MoDOT will receive bids electronically through MissouriBUYS, by mail through USPS, UPS, or FEDEX. If you intend to submit a hard copy bid, you must notify the buyer of record, Ashten Lorts, five (5) days before the solicitation closing date. MoDOT will not accept any bid responses by email. Contact the buyer of record, Ashten Lorts, at ashten.lorts@modot.mo.gov for all inquiries.**
Amendment Date	**10/22/2025 11:27 AM**
Amendment Description	**Re-uploading Exhibit N, Exhibit M, and Attachment 10 as vendors were having issues with downloading the documents from the Bid Board/Solicitation.**

Open Date	**10/22/2025 10:00 AM**	Close Date	**11/24/2025 2:00 PM**
Buyer	**ASHTEN LORTS**	E-Mail	**ASHTEN.LORTS@MODOT.MO.GOV**

1.2 Terms

Agreement Start Date		Agreement End Date	
Total Agreement Amount (USD)		Minimum Release Amount (USD)	
Payment Terms	**Net 45**	Freight Terms	
Shipping Method		FOB	
Negotiation Currency	**USD (US Dollar)**	Price Precision	**0**
Response Valid Until	**09/30/2026 12:00 AM**	Reference Number	

Note to Buyer **2026 order board is first come first serve , may be closed before 9/30/2026 , need to consult prior to placing an order.**

PREMIER TRUCK GROUP OF COLUMBIA could not agree to the Liquidated Damages stated n Section 3.10

Docusign Envelope ID: FFB00063-5087-8929-8067-CE06E5864C59

2 Requirements

** Response is required*

2.1 Section 1. Cooperative Procurement

*1. Is your firm willing to offer such cooperative purchasing for Missouri counties, cities or other political entities? If yes, please attach a completed Cooperative Agreement Notice below by clicking the + icon.

Select one of the following:

☑ a. Yes

Response Attachments:

File Name or URL	Type	Description
COOPERATIVE AGREEMENT NOTICE V	File	PDF
Cooperative Agreement Notice.p	File	PDF

☐ b. No

2.2 Section 2. DocuSign Information

*1. Provide the name, e-mail address, and cell phone number of the person(s) authorized to sign an agreement resulting from this solicitation.

MIKE TALLEUR , MTALLEUR@PREMIERTRUCK.COM , 573-303-7725

2.3 Section 3. Single Point of Contact

*1. What is the name, address, email, and telephone number of the single point of contact for the contract?

MIKE TALLEUR ,1660 JADE RD COLUMBIA MO 65201 , 573-303-7725

2. What is the name, address, email, and telephone number of the backup to the single point of contact for the contract? If the supplier does not have a backup to the single point of contact, the supplier should type "**N/A**" in the text box.

PATRICK JOHNSON , 1660 JADE RD COLUMBIA MO 65201 , 405-326-5228

2.4 Section 4. Dump Truck Pricing Sheet

*1. The supplier must complete the Dump Truck Pricing Sheet attached. Once the supplier has completed the Dump Truck Pricing Sheet, the supplier shall **attach** the completed document and type the word ***completed*** in the text box.

COMPLETED

Response Attachments:

File Name or URL	Type	Description
Dump Truck Pricing Sheet FINAL	File	

2.5 Section 5. Estimated Delivery Time

*1. What is the delivery lead time A.R.O.?

Docusign Envelope ID: FFB00063-5087-8929-8067-CE06E5864C59

MAXIMUM OF 365 DAYS FROM DATE OF ORDER

2.6 Section 6. Replacement Parts

*1. What percent discounts off Manufacturer's Suggested Retail Price (M.S.R.P.) would your company offer on replacement parts on previously purchased equipment?

PTG OF COLUMBIA (20% OFF OF LIST PRICE) VIKING CIVES MIDWEST (25%)

2.7 Section 7. Required Completed Documents

*1. The vendor should complete all the Exhibits attached in the IFB. Once the vendor has completed the Exhibits, the vendor should **attach** the completed Exhibits and type the word **completed** in the text box.

COMPLETED

Response Attachments:

File Name or URL	Type	Description
Exhibit N - BUY AMERICAN FORM.	File	
BUY AMERICA CERTIFICATION VIKI	File	DOCUMENT
ANTI-DISCRIMINATION AGAINST IS	File	DOCUMENT
Exhibit M Antidiscrimination A	File	DOCUMENT

2.8 Section 8. Supplier Attachments

*1. The supplier should upload any attachments or documents (i.e. brochures, configuration specifications, warranty information, unit features, servicing locations, etc.) the supplier would like MoDOT to review. Once the supplier has uploaded the attachments and documents, the supplier should type the word **completed** in the text box. If the supplier does not have any additional uploads, the supplier should type the word **N/A** in the text box.

COMPLETED

Response Attachments:

File Name or URL	Type	Description
MY27 DUMP TRUCK SA CUMMINS CU	File	
MY27 DUMP TRUCK TA CUMMINS CUS	File	
MY27 TA TOWPLOW DUMP TRUCK X	File	
MY27 TA TOWPLOW DUMP TRUCK DD	File	
Henderson MODOT Weights 11.19.	File	HENDERSON
CONFIGURATIONS AND WARRANTY.pd	File	VIKING-CIVES

Docusign Envelope ID: FFB00063-5087-8929-8067-CE06E5864C59

3 Lines

3.1 Line Information

Response Amount (USD) **0.00**

Line	Estimated Quantity	UOM	Response Price	Line Amount	Response Minimum Release Amount
1-Dump Truck		EACH	0	0.00	

3.2 Line Details

3.2.1 Line 1 Dump Truck

Line Type **Goods**
Item
Category Name **25101601 - DUMP TRUCKS**
Target Minimum Release Amount (USD)

Revision
Estimated Quantity
UOM **EACH**
Response Price (USD) **0**
Supplier Item
Manufacturer
Manufacturer Part Number

4 Contract Terms

Docusign Envelope ID: FFB00063-5087-8929-8067-CE06E5864C59

If you have any questions, please contact:

Procurement Entity	**State of Missouri**
Buyer	**ASHTEN LORTS**
Location	
Phone	
Fax	
E-mail	**ASHTEN.LORTS@MODOT.MO.GOV**

Docusign Envelope ID: FFB00063-5087-8929-8067-CE06E5864C59

State of Missouri

Missouri Department of Transportation

Responses are preferred to be submitted electronically via MissouriBUYS, powered by MOVERS.

ATTENTION:

1. After reviewing the solicitation, the vendor must complete and return **all necessary exhibits**.
2. Due to lead times for obtaining the information needed to complete the various **Business Compliance Exhibits** herein as explained in the solicitation's Supplier Response Exhibits, suppliers are encouraged to IMMEDIATELY begin securing these verifications.
3. The supplier must be registered in MissouriBUYS (Powered by MOVERS) **to be considered for contract award.**

INSTRUCTIONS:

1. From the Table of Contents on the left-hand side of this screen, navigate to the Contract Terms section and click the Download Contract button to review the solicitation terms in its entirety.
2. Navigate to the Lines and Requirements sections to review and download any available attachments.
3. Click Create Response to enter your response.

Docusign Envelope ID: FFB00063-5087-8929-8067-CE06E5864C59

Table of Contents

1 Overview....4
1.1 General Information....4
1.2 Schedule....4
1.3 Additional Information....4
1.4 Solicitation Controls....4
1.5 Terms....4
1.6 Attachments....5
2 Requirements....6
2.1 Section 1. Cooperative Procurement....6
2.2 Section 2. DocuSign Information....7
2.3 Section 3. Single Point of Contact....7
2.4 Section 4. Dump Truck Pricing Sheet....7
2.5 Section 5. Estimated Delivery Time....7
2.6 Section 6. Replacement Parts....8
2.7 Section 7. Required Completed Documents....8
2.8 Section 8. Supplier Attachments....8
3 Lines....9
3.1 Line Information....9
3.2 Line Details....9
3.2.1 Line 1....9
4 Appendix: Alternate Lines....10
4.1 Instructions for Alternate Lines....10
4.2 Alternate Lines Template....10
5 Contract Terms....10

Docusign Envelope ID: FFB00063-5087-8929-8067-CE06E5864C59

1 Overview

1.1 General Information

Title	**MoDOT Statewide FY26 - Dump Truck 2027 Models - Multiple Award**
Synopsis	**This Invitation for Bid (IFB) seeks bids from qualified organizations to provide 2027 model year Dump Trucks (Single Axle, Tandem Axle, and Towplow) to the Missouri Department of Transportation (MoDOT). The award period shall commence from the date of contract award until October 31, 2026. MoDOT will receive bids electronically through MissouriBUYS, by mail through USPS, UPS, or FEDEX. If you intend to submit a hard copy bid, you must notify the buyer of record, Ashten Lorts, five (5) days before the solicitation closing date. MoDOT will not accept any bid responses by email. Contact the buyer of record, Ashten Lorts, at ashten.lorts@modot.mo.gov for all inquiries.**
Amendment Date	**10/22/2025 11:27 AM**
Amendment Description	**Re-uploading Exhibit N, Exhibit M, and Attachment 10 as vendors were having issues with downloading the documents from the Bid Board/Solicitation.**
Buyer	**ASHTEN LORTS**
E-Mail	**ASHTEN.LORTS@MODOT.MO.GOV**
Outcome	**Blanket Purchase Agreement**

1.2 Schedule

Close Date	**11/24/2025 2:00 PM**	Open Date	**10/22/2025 10:00 AM**
Time Zone	**Central Time**		

1.3 Additional Information

Pre-Bid/Pre-Proposal Conference Date and Time	**00+00:00**
Pre-Bid/Pre-Proposal Conference Location	
Tour Date and Time	**00+00:00**
Tour Location	
Tour Contact Name	
Tour Contact Phone #	
Tour Contact Email	

1.4 Solicitation Controls

Response Visibility	**Sealed**

Lines Settings

Rank Indicator	**No indicator displayed**
Ranking Method	**Multiattribute scoring**

1.5 Terms

Agreement Start Date		Agreement End Date	
Agreement Amount (USD)		Minimum Release Amount (USD)	
Payment Terms	**Net 45**	Freight Terms	
Shipping Method		FOB	

Docusign Envelope ID: FFB00063-5087-8929-8067-CE06E5864C59

Solicitation Currency **USD (US Dollar)**

Price Precision **0**

1.6 Attachments

File Name or URL	Type	Description
Exhibit N - BUY AMERICAN FORM.	File	
Exhibit M Antidiscrimination A	File	
Attachment 10 MoDOT District b	File	
Attachment 1 - Single Axle Tru	File	
Attachment 2 - Tandem Axle Tru	File	
Attachment 3 - Tandem Axle Tow	File	
Attachment 4 District Configur	File	
Attachment 5 Mud Flap Drawing.	File	
Attachment 6 TMA Pocket.pdf	File	
Attachment 7 Tarp Design.pdf	File	
Attachment 8 Front Plow Hitch.	File	
Attachment 9 Front Plow Hitch.	File	

Docusign Envelope ID: FFB00063-5087-8929-8067-CE06E5864C59

2 Requirements

**Response is required*

Cooperative Procurement
The Missouri Department of Transportation (MoDOT) is interested in assisting Missouri counties, cities, special road districts, etc. in purchasing equipment, various materials and supplies that meet the MoDOT specifications. It is understood MoDOT will not issue purchase orders, accept delivery nor make payment for items ordered by these agencies. It is further understood the price is based on meeting the MoDOT specifications. Any added options, deletions, or extra freight costs would be negotiated between the local agency and the successful vendor. If the response is "No" to the first question, simply respond "N/A" in any additional required response fields below.

DocuSign Information
MoDOT utilizes DocuSign as the method to secure electronic signatures for all contract agreements.

Single Point Contact
The contractor shall specify their customer service representative assigned to the MoDOT State contract. MoDOT requests a backup single point of contact be provided as well.

Estimated Delivery Time
Specify the estimated delivery lead time required to complete delivery in-full A.R.O. (After Receipt of Order).

Dump Truck Pricing Sheet
The Bidder must complete Column B's information for the Body Builder's Company Name and Chassis Model and the additional fields including engine make, engine model, engine horsepower, engine torque, corrosion proof oil pan, and stainless-steel transmission cooler, lines. The Bidder should provide information for the Configuration Packages 1 -7 for the Body Builder's Company Name and Chassis Model they propose. If the Bidder is NOT able to provide a Configuration Package for the Body Builder's Company Name or Chassis Model, the Bidder should write "NO BID" in the Configuration Package section of this excel document. The Bidder must complete and submit the Dump Truck Pricing Spreadsheet in response to this bid. The Bidder shall not alter the format of the Dump Truck Pricing Spreadsheet. All pricing must be entered in the excel document provided.

Replacement Parts
This question is specific to replacement parts only and refers to any discount off a Manufacturer's Suggested Retail Price for said replacement parts. This discount will not be applicable to options on a new unit, only for a previously purchased piece of equipment.

Required Completed Documents
The supplier should upload the necessary documents requested by MoDOT for the supplier to complete. The response documents include:
1. Exhibit N - Buy American
2. Exhibit M - Anti-Discrimination Against Israel

Supplier Attachments
The supplier should upload all documents and attachments (i.e. brochures, configuration specifications, etc.) the s upplier would like MoDOT to review.

2.1 Section 1. Cooperative Procurement

*1. Is your firm willing to offer such cooperative purchasing for Missouri counties, cities or other political entities? If yes, please attach a completed Cooperative Agreement Notice below by clicking the + icon.

Docusign Envelope ID: FFB00063-5087-8929-8067-CE06E5864C59

Attachments:

File Name or URL	Type	Description
Cooperative Agreement Notice	File	

Select one of the following:-

☐ a. Yes*(Response attachments are required)*
☐ b. No

2.2 Section 2. DocuSign Information

*1. Provide the name, e-mail address, and cell phone number of the person(s) authorized to sign an agreement resulting from this solicitation.

_____

_____

_____

2.3 Section 3. Single Point of Contact

*1. What is the name, address, email, and telephone number of the single point of contact for the contract?

_____

2. What is the name, address, email, and telephone number of the backup to the single point of contact for the contract? If the supplier does not have a backup to the single point of contact, the supplier should type "**N/A**" in the text box.

_____

2.4 Section 4. Dump Truck Pricing Sheet

*1. The supplier must complete the Dump Truck Pricing Sheet attached. Once the supplier has completed the Dump Truck Pricing Sheet, the supplier shall **attach** the completed document and type the word ***completed*** in the text box.

Attachments:

File Name or URL	Type	Description
Dump Truck Pricing Sheet. xlsx	File	

Response attachments are required.

_____

_____

_____

2.5 Section 5. Estimated Delivery Time

*1. What is the delivery lead time A.R.O.?

Docusign Envelope ID: FFB00063-5087-8929-8067-CE06E5864C59

2.6 Section 6. Replacement Parts

*1. What percent discounts off Manufacturer's Suggested Retail Price (M.S.R.P.) would your company offer on replacement parts on previously purchased equipment?

2.7 Section 7. Required Completed Documents

*1. The vendor should complete all the Exhibits attached in the IFB. Once the vendor has completed the Exhibits, the vendor should **attach** the completed Exhibits and type the word **completed** in the text box.

Attachments:

File Name or URL	Type	Description
Exhibit M Antidiscrimination A	File	
Exhibit N - BUY AMERICAN FORM.	File	

Response attachments are required.

2.8 Section 8. Supplier Attachments

*1. The supplier should upload any attachments or documents (i.e. brochures, configuration specifications, warranty information, unit features, servicing locations, etc.) the supplier would like MoDOT to review. Once the supplier has uploaded the attachments and documents, the supplier should type the word **completed** in the text box. If the supplier does not have any additional uploads, the supplier should type the word **N/A** in the text box.

Response attachments are optional.

Docusign Envelope ID: FFB00063-5087-8929-8067-CE06E5864C59

3 Lines

Instructions The bidder must enter **$0.00 in the line-item section**, but the award/evaluation shall be based on the firm, fixed price quoted in the Dump Truck Pricing Sheet.

3.1 Line Information

Line	Estimated Quantity	UOM	Response Price	Line Amount	Response Minimum Release Amount
1-Dump Truck		EACH			

3.2 Line Details

3.2.1 Line 1 Dump Truck

To provide an alternate line, see appendix.

Category Name **25101601 - DUMP TRUCKS**

Item

Revision

Allow Alternate Lines **Yes**

Alternate Line Provided ☐**Yes** ☐**No**

Target Minimum Release Amount (USD)

Start Price (USD)

Docusign Envelope ID: FFB00063-5087-8929-8067-CE06E5864C59

4 Appendix: Alternate Lines

4.1 Instructions for Alternate Lines

Alternate lines are allowed for some solicitation lines. For these lines, you can propose one or more alternatives by entering information for each alternate line in the format given below. Print and insert multiple copies as per your requirement.

4.2 Alternate Lines Template

Solicitation Line *(Number and description of the solicitation line for which you have an alternative)*	Example:1-xxxxxx where xxxxxx is the line description of first solicitation line.
Alternate Line Number *(Enter only numbers in sequence starting with 1 for every alternate line)*	
Alternate Line Description	
Response Price *(For a solicitation line with cost factors, enter your line price in the cost factors table)*	
Response Minimum Release Amount	
Note to Buyer	

5 Contract Terms

Docusign Envelope ID: FFB00063-5087-8929-8067-CE06E5864C59

Contract Terms and Conditions

1. MoDOT STANDARD SOLICITATION PROVISIONS....14
1.1. Solicitation Authority....14
1.2. Bids / Quotes to be Submitted by Officer or Employee....14
1.3. MHTC Rights Reserved....14
1.4. Personal Privacy Protection Act Notification....14
2. MoDOT IFB GENERAL TERMS AND CONDITIONS....14
2.1. Definitions....14
2.2. Nondiscrimination....15
2.3. Contract/Purchase Order....15
2.4. Applicable Laws and Regulations....16
2.5. Open Competition and IFB Document....16
2.6. Preparation of Bids....17
2.7. Submission of Bids....17
2.8. Bid Opening....18
2.9. Evaluation and Award....18
2.10. Executive Order....19
2.11. Preferences....20
2.12. Cancellation of Contract....20
2.13. Bankruptcy or Insolvency....20
2.14. Warranty....20
2.15. Status of Independent Contractor....20
2.16. Non-Waiver....20
2.17. Indemnification....21
2.18. Right of Acceptance and/or Rejection....21
2.19. Inspection and Acceptance....21
2.20. Invoicing and Payment....21
2.21. Conflict of Interest....22
2.22. Tax Exempt Status....22
2.23. Anti-Discrimination Against Israel Act Certification....22
2.24. The Domestic Products Procurement Act....22
2.25. Drug Free Workplace....23
3. MoDOT IFB SPECIAL TERMS AND CONDITIONS....23
3.1. Specifications Terminology and Definitions....23
3.2. IFB Questions....24
3.3. Single Point of Contact Requirements....24
3.4. Dump Truck Specification Compliance and Other Requirements....24
3.5. District Configuration Package Requirements....25
3.6. Dump Truck Ordering Requirements....25
3.7. Pre-Delivery Inspections....25
3.8. Delivery-Additional Requirements....25
3.9. Post-Delivery Inspections....26
3.10. Liquidated Damages....27
3.11. Increase or Decrease Quantities....27
3.12. Insurance - General Delivery / Drop Off Services....27

Docusign Envelope ID: FFB00063-5087-8929-8067-CE06E5864C59

3.13. Components/Items Purchased Using M.S.R.P.....27
3.14. Contract Period.....28
3.15. Invoicing and Payment Requirements.....28
3.16. Escalation Clause.....30
3.17. Additional Requirements.....30
4. BID SUBMISSION INFORMATION.....31
4.1. Required Information.....31
5. EVALUATION AND AWARD CRITERIA.....32
5.1. Evaluation Criteria.....32
5.2. Award Criteria.....33

Docusign Envelope ID: FFB00063-5087-8929-8067-CE06E5864C59

VENDOR RESPONSIBILITY

The vendor is solely responsible for ensuring timely submission of their solicitation response. Failure to allow adequate time prior to the solicitation end date to complete and submit a response to a solicitation, particularly in the event technical support assistance is required, places the vendor and their response at risk of not being accepted on time.

The State of Missouri's Privacy Policy can be accessed here.

VENDOR'S INSTRUCTIONS

Submission of Bids

Vendors should complete and attach all applicable exhibits.

MODOT SECTION NUMBERING

Section Numbering

All section numbering contained in this solicitation is for the convenience of reference only and is not intended to define or limit the scope of any provision of this solicitation and may not be sequential.

SOLICITATION REQUIREMENTS

Instructions for Submitting a Response

The Missouri Department of Transportation advertises all bid solicitation documents on the MissouriBUYS Bid Board (https://www.missouribuys.mo.gov). MissouriBUYS is the State of Missouri's web-based statewide eProcurement system. To respond electronically to a solicitation, the vendor must first register with MissouriBUYS by going to the MissouriBUYS Home Page (https://missouribuys.mo.gov), clicking the "Supplier Register" button at the top of the page, and completing the Vendor Registration.

IMPORTANT NOTICE TO ALL VENDORS:

The Missouri Department of Transportation prefers receipt of all bid responses as electronic submissions. Hard copy submissions may be permitted based on the circumstances and content of the relevant solicitation with the approval of the buyer five (5) business days prior to the solicitation close date.

The solicitation as it appears digitally on the MissouriBUYS website is the official document of record. It is incumbent on the Vendor to inspect and ensure any downloaded or printed version of the solicitation contains all information, terms and conditions contained in the solicitation as it appears digitally on the MissouriBUYS website. In the event of any dispute regarding the contents of the solicitation, the solicitation as it appears digitally on the MissouriBUYS website shall take precedence and priority over any other downloaded or printed version of the solicitation.

The vendor is solely responsible for ensuring timely submission of their solicitation response.

Docusign Envelope ID: FFB00063-5087-8929-8067-CE06E5864C59

Failure to allow adequate time prior to the solicitation end date to complete and submit a response to a solicitation, particularly in the event technical support assistance is required, places the vendor and their response at risk of not being accepted on time.

1. MoDOT STANDARD SOLICITATION PROVISIONS

1.1. Solicitation Authority

The solicitation for the procurement of services referenced therein, is being issued under, and governed by, the provisions of Title 7 Missouri Department of Transportation, Division 10 Missouri Highways and Transportation Commission, Chapter 11 Procurement of Supplies, of the Code of State Regulations. The Missouri Highways and Transportation Commission (MHTC/Commission), acting by and through its operating arm, the Missouri Department of Transportation (MoDOT), draws the Offeror's attention to said 7 CSR 10-11 for all the provisions governing solicitation and receipt of proposals and the award of the contract pursuant to this solicitation.

1.2. Bids / Quotes to be Submitted by Officer or Employee

All bids/quotes must be submitted by an authorized representative of the firm. Obligations assumed by such submission must be fulfilled.

1.3. MHTC Rights Reserved

Work is to be performed under the general supervision and direction of MoDOT. If awarded, the Contractor agrees to furnish any and all equipment, supplies and/or services specified in the solicitation, at the prices quoted, pursuant to all requirements and specifications contained herein.

1.4. Personal Privacy Protection Act Notification

MHTC and MoDOT comply with all provisions in the Personal Privacy Protection Act found in section 105.1500, RSMo, and follow practices to keep confidential and sensitive information secure. Bidders acknowledge that submission of information is voluntary and that MHTC is not asking or requiring the submission of "personal information" as defined in the act. By submitting a bid, Bidders and Contractors agree to not to bring a suit against MHTC, or any employees, under section 105.1500, RSMo.

2. MoDOT IFB GENERAL TERMS AND CONDITIONS

2.1. Definitions

Capitalized terms as well as other terms used but not defined herein shall have the meaning assigned to them in section 7 CSR 10-11.010 Definition of Terms. Whenever the following words and expressions appear in an Invitation for Bid (IFB) document or any addendum thereto, the definition or meaning described below shall apply.

1. **Addendum** means a written official modification to an IFB.
2. **Amendment** means a written official modification to a contract.
3. **Attachment** applies to all forms or documents which are included with an IFB to incorporate any

Docusign Envelope ID: FFB00063-5087-8929-8067-CE06E5864C59

informational data or requirements related to the performance requirements and/or specifications.

4. **Bid end date** and time and similar expressions mean the exact deadline required by the IFB for the receipt of bids.
5. **Contract** means the resulting agreement that has been executed by the successful bidder and the Commission.
6. **Exhibit** applies to forms which are included with an IFB for the vendor to complete and submit with the bid prior to the specified end date and time.
7. **Invitation for Bid (IFB)** means the solicitation document issued to potential vendors for the purchase of equipment, supplies, and/or services as described in the document. The definition includes these Terms and Conditions as well as all Pricing Pages, Exhibits, Attachments, and Addendums thereto.
8. **May** means a certain feature, component, or action is permissible, but not required.
9. **Must** means a certain feature, component, or action is a mandatory condition. Failure to provide or comply will result in a bid being considered non-responsive.
10. **Pricing page(s)** applies to the form(s) which the vendor must state the price(s) applicable for the equipment, supplies, and/or services required in the IFB. Pricing page(s) must be completed and submitted by the vendor with the bid response prior to the specified bid end date and time.
11. **Revised Statutes of Missouri (RSMo)** refers to the body of laws enacted by the Legislature which govern the operations of all agencies of the State of Missouri.
12. **Shall** has the same meaning as the word must.
13. **Should** means that a certain feature, component and/or action is desirable but not mandatory.

2.2. Nondiscrimination

The Contractor shall comply with all state and federal statutes applicable to the Contractor relating to nondiscrimination, including, but not limited to, Chapter 213, RSMo; Title VI and Title VII of Civil Rights Act of 1964 as amended (42 U.S.C. Sections 2000d and 2000e, et seq.); and with any provision of the Americans with Disabilities Act (42 U.S.C. Section 12101, et seq.)

1. **Sanctions for Noncompliance**: In the event of the Contractor's noncompliance with these nondiscrimination provisions of the Contract, MHTC shall impose such contract sanctions as it or the Federal Highway Administration may determine to be appropriate, including, but not limited to:

    a. withholding of payments to the Contractor under the Contract until the Contractor complies, and/or,
    b. cancellation, termination or suspension of the Contract, in whole or in part.

2.3. Contract/Purchase Order

By submitting a response, the Bidder agrees to furnish any and all equipment, supplies and/or services specified in the solicitation documents, at the prices quoted, pursuant to all requirements and specifications contained therein.

1. The Contract shall consist of: (1) the solicitation documents, amendments thereto, and/or Best and Final Offer (BAFO) request(s) with any changes/additions, (2) the Contractor's bid response, and (3) the MHTCs acceptance of the bid by post-award contract or purchase order.
2. A notice of award does not constitute an authorization for shipment of equipment or supplies or a directive to proceed with services. Before providing equipment, supplies and/or services, the

Docusign Envelope ID: FFB00063-5087-8929-8067-CE06E5864C59

Contractor must receive a properly authorized notice to proceed and/or purchase order

2.4. Applicable Laws and Regulations

The Contract shall be construed according to the laws of the State of Missouri. The Contractor shall comply with all applicable local, state, and federal laws and regulations related to the performance of the Contract. The exclusive venue for any legal proceeding relating to or arising, out of the contract shall be in the Circuit Court of Cole County, Missouri.

1. The Contractor must be registered and maintain good standing with the Secretary of State of the State of Missouri, Missouri Department of Revenue, and other regulatory agencies, as may be required by law or regulations. Prior to the issuance of a purchase order and/or notice to proceed, the Contractor may be required to submit to MHTC a copy of their current Authority Certificate from the Secretary of State of the State of Missouri and/or a copy of their Certificate of No Tax Due from the Missouri Department of Revenue.
2. Prior to the issuance of a purchase order and/or notice to proceed, all out-of-state Contractors providing services in the state of Missouri must submit to MHTC a copy of their current Transient Employer Certificate from the Missouri Department of Revenue, and a current Certificate of Registration from the Secretary of State of the state of Missouri.

2.5. Open Competition and IFB Document

It shall be the vendor's responsibility to ask questions, request changes or clarification, or otherwise advise MoDOT if any language, specifications or requirements of an IFB appear to be ambiguous, contradictory, and/or arbitrary, or appear to inadvertently restrict or limit the requirements stated in the IFB to a single source. Any and all communication from vendors regarding specifications, requirements, competitive bid process, etc., must be directed to the IFB Contact, unless the IFB specifically refers the vendor to another contact. Such e-mail, fax, or phone communication should be received at least ten calendar days prior to the official bid end date.

1. Every attempt shall be made to ensure that the vendor receives an adequate and prompt response. However, in order to maintain a fair and equitable bid process, all vendors will be advised, via the issuance of an addendum to the IFB, of any relevant or pertinent information related to the procurement. Therefore, vendors are advised that unless specified elsewhere in the IFB, any questions received less than ten calendar days prior to the IFB end date may not be answered.
2. Vendors are cautioned that the only official position of the MHTC is that which is issued in the IFB or an addendum thereto. No other means of communication, whether oral or written, shall be construed as a formal or official response or statement.
3. The IFB is available for viewing and downloading on the MissouriBUYS Statewide eProcurement System. Registered vendors are electronically notified of those bid opportunities that match the commodity codes for which the vendor registered in MissouriBUYS. If a registered vendors e-mail address is incorrect, the vendor must update the e-mail address themselves on the state's MissouriBUYS Statewide eProcurement System at https://missouribuys.mo.gov/.
4. MoDOT reserves the right to officially amend or cancel an IFB after issuance. It shall be the sole responsibility of the vendor to monitor the MissouriBUYS Statewide eProcurement System to obtain a copy of the addendum(s). Registered vendors who received e-mail notification of the bid opportunity when the IFB was established and registered vendors who have responded to the IFB on-line prior to an addendum being issued, should receive e-mail notification of the addendum(s).

Docusign Envelope ID: FFB00063-5087-8929-8067-CE06E5864C59

Registered vendors who received e- mail notification of the bid opportunity when the IFB was established and registered vendors who have responded to the bid on-line prior to a cancellation being issued, should receive e-mail notification of a cancellation issued prior to the exact end date and time specified in the IFB.

2.6. Preparation of Bids

Vendors must examine the entire IFB carefully. Failure to do so shall be at the vendor's risk.

1. Unless otherwise specifically stated in the IFB, all specifications and requirements constitute minimum requirements. All bids must meet or exceed the stated specifications and requirements.
2. Unless otherwise specifically stated in the IFB, any manufacturer names, trade names, brand names, information and/or catalog numbers listed in a specification and/or requirement are for informational purposes only and are not intended to limit competition. The vendor may offer any brand which meets or exceeds the specification for any item, but must state the manufacturer's name and model number for any such brands in the bid. In addition, the vendor shall explain, in detail, (1) the reasons why the proposed equivalent meets or exceeds the specifications and/or requirements and (2) why the proposed equivalent should not be considered an exception thereto. Bids which do not comply with the requirements and specifications are subject to rejection without clarification.
3. Bids lacking any indication of intent to bid an alternate brand or to take an exception shall be received and considered in complete compliance with the specifications and requirements as listed in the IFB.
4. In the event that the vendor is an agency of state government or other such political subdivision which is prohibited by law or court decision from complying with certain provisions of an IFB, such vendor may submit a bid which contains a list of statutory limitations and identification of those prohibitive clauses. The vendor should include a complete list of statutory references and citations for each provision of the IFB, which is affected by this paragraph. The statutory limitations and prohibitive clauses may (1) be requested to be clarified in writing or (2) be accepted without further clarification if the statutory limitations and prohibitive clauses are deemed acceptable. If MHTC determines clarification of the statutory limitations and prohibitive clauses is necessary, the clarification will be conducted in order to agree to language that reflects the intent and compliance of such law and/or court order and the IFB.
5. All equipment and supplies offered in a bid must be new, of current production, and available for marketing by the manufacturer unless the IFB clearly specifies that used, reconditioned, or remanufactured equipment and supplies may be offered.
6. Prices shall include all packing, handling and shipping charges FOB destination, freight prepaid and allowed unless otherwise specified in the IFB.
7. Bids, including all pricing therein, shall remain valid for 90 days from bid opening unless otherwise indicated. If the bid is accepted, the entire bid, including all prices, shall be firm for the specified contract period.
8. Any foreign vendor not having an Employer Identification Number assigned by the United States Internal Revenue Service (IRS) must submit a completed IRS Form W-8 prior to or with the submission of their bid in order to be considered for award.

2.7. Submission of Bids

Registered suppliers may submit bids electronically through the MissouriBUYS Statewide eProcurement System at https://missouribuys.mo.gov/ or by delivery of a hard copy to the Contact address shown on the Solicitation General Header Information. Suppliers that have not registered on the MissouriBUYS

Docusign Envelope ID: FFB00063-5087-8929-8067-CE06E5864C59

Statewide eProcurement System may submit bids hard copy to the Contact address shown on the Solicitation General Header Information. Delivered bids must be sealed in an envelope or container, and received in the required location no later than the exact end date and time specified in the IFB. All bids must (1) be submitted by a duly authorized representative of the suppliers organization, (2) contain all information required by the IFB, and (3) be priced as required. It shall be the responsibility of the vendor to ensure their bid is in the required location no later than the exact end date and time specified in the IFB.

1. The sealed envelope or container containing a bid should be clearly marked on the outside with (1) the official IFB number and (2) the official end date and time. Different bids should not be placed in the same envelope, although copies of the same bid may be placed in the same envelope.
2. A bid submitted electronically by a registered supplier may be modified on-line prior to the official end date and time. A bid which has been delivered to the MHTC office may be modified by signed, written notice which has been received in the required location prior to the official end date and time specified. A bid may also be modified in person by the vendor or its authorized representative, provided proper identification is presented before the official end date and time. Telephone or telegraphic requests to modify a bid shall not be honored.
3. A bid submitted electronically by a registered supplier may be retracted on-line prior to the official end date and time. A bid which has been delivered to the required location may only be withdrawn by a signed, written document on company letterhead transmitted via mail, e-mail, or facsimile which has been received at the required location prior to the official end date and time specified. A bid may also be withdrawn in person by the vendor or its authorized representative, provided proper identification is presented before the official end date and time. Telephone or telegraphic requests to withdraw a bid shall not be honored.
4. A bid may also be withdrawn after the bid opening through submission of a written request by an authorized representative of the vendor. Justification of withdrawal decision may include a significant error or exposure of bid information that may cause irreparable harm to the vendor.
5. When submitting a bid electronically, the registered vendor indicates acceptance of all IFB requirements, terms and conditions by clicking on the Review and Submit button on the Response Review tab.

   Faxed bids shall not be accepted. However, faxed and e-mail no-bid notifications shall be accepted.

2.8. Bid Opening

Bid openings are public on the end date and at the opening time specified on the IFB document. All vendors may view the same bid response information on the MissouriBUYS Statewide eProcurement System. MHTC will not provide prices or other bid information via the telephone.

1. Bids which are not received in the MHTC office prior to the official end date and time shall be considered late, regardless of the degree of lateness, and normally will not be opened.

2.9. Evaluation and Award

Any clerical error, apparent on its face, may be corrected by the buyer before contract award. Upon discovering an apparent clerical error, the buyer shall contact the vendor and request clarification of the intended bid. The correction shall be incorporated in the notice of award. Examples of apparent clerical errors are: 1) misplacement of a decimal point; and 2) obvious mistake in designation of unit.

1. Any pricing information submitted shall be subject to evaluation if deemed to be in the best interest of the MHTC.

Docusign Envelope ID: FFB00063-5087-8929-8067-CE06E5864C59

2. The vendor is encouraged to propose price discounts for prompt payment or propose other price discounts that would benefit the MHTC. However, unless otherwise specified in the IFB, pricing shall be evaluated at the maximum potential financial liability to the MHTC.
3. Awards shall be made to the vendor whose bid (1) complies with all mandatory specifications and requirements of the IFB and (2) is the lowest and best bid, considering price, responsibility of the vendor, and all other evaluation criteria specified in the IFB and (3) complies with all applicable Missouri statutes and Executive Orders.
4. In the event all vendors fail to meet the same mandatory requirement in an IFB, MHTC reserves the right, at its sole discretion, to waive that requirement for all vendors and to proceed with the evaluation. In addition, MHTC reserves the right to waive any minor irregularity or technicality found in any individual bid.
5. MHTC reserves the right to reject any and all bids. When all bids are non-responsive or otherwise unacceptable and circumstances do not permit a rebid, MHTC may negotiate for the required supplies.
6. When evaluating a bid, the MHTC reserves the right to consider relevant information and fact, whether gained from a bid, from a vendor, from vendor references, or from any other source.
7. Any information submitted with the bid, regardless of the format or placement of such information, may be considered in making decisions related to the responsiveness and merit of a bid and the award of a contract.
8. Any award of a contract shall be made by notification to the successful vendor. MHTC reserves the right to make awards by item, group of items, or an all or none basis unless otherwise identified in the solicitation. The grouping of items awarded shall be determined based upon factors such as item similarity, location, administrative efficiency, or other considerations in the best interest of the MHTC.
9. All bids and associated documentation which were submitted on or before the official end date and time will be considered open records pursuant to section 610.021, RSMo, following the official opening of bids.
10. The MHTC posts all bid results on the MissouriBUYS Statewide eProcurement System website for all vendors to view for a reasonable period of time after bid award.
11. The MHTC reserves the right to request clarification of any portion of the vendor response in order to verify the intent of the vendor. The vendor is cautioned, however, that its response may be subject to acceptance or rejection without further clarification.
12. Any bid award protest must be received within ten (10) business days after the date of award in accordance with the requirements of 7 CSR 10-11.020 (10).
13. The final determination of contract award(s) shall be made by the MHTC.

2.10. Executive Order

The Contractor shall comply with all the provisions of Executive Order 07-13, issued by the Honorable Matt Blunt, Governor of Missouri, on the sixth (6th) day of March, 2007. This Executive Order, which promulgates the State of Missouri's position to not tolerate persons who contract with the state engaging in or supporting illegal activities of employing individuals who are not eligible to work in the United States, shall be incorporated herein by reference and made a part of the Contract.

1. The Contractor hereby certifies that any employee of the Contractor assigned to perform services under the Contract is eligible and authorized to work in the United States in compliance with federal law.
2. In the event the Contractor fails to comply with the provisions of the Executive Order 07-13, or in the event the Commission has reasonable cause to believe that the Contractor has knowingly employed individuals who are not eligible to work in the United States in violation of federal law, the Commission reserves the right to impose such contract sanctions as it may determine to be appropriate, including but not limited to cancellation, termination or suspension in whole or in part or both.
3. The Contractor shall include the provisions of this paragraph in every subcontract. The Contractor shall take such action with respect to any subcontract as the Commission may direct as a means of enforcing such provisions, including sanctions for noncompliance.

Docusign Envelope ID: FFB00063-5087-8929-8067-CE06E5864C59

2.11. Preferences

In the evaluation of bids/quotes, preferences shall be applied in accordance with 7 CSR 10- 11.020(9). Contractors should apply the same preferences in selecting subcontractors.

1. Bidders are encouraged to obtain minority business enterprise (MBE) and women business enterprise (WBE) participation in this work through the use of subcontractors, suppliers, joint ventures, or other arrangements that afford meaningful participation for M/WBEs. Bidders are encouraged to obtain 10% MBE and 5% WBE participation.

2.12. Cancellation of Contract

The MHTC may cancel the Contract at any time for a material breach of contractual obligations or for convenience by providing the Contractor with written notice of cancellation. Should the MHTC exercise its right to cancel the Contract for such reasons, cancellation will become effective upon the date specified in the notice of cancellation sent to the Contractor.

2.13. Bankruptcy or Insolvency

Upon filing for any bankruptcy or insolvency proceeding by or against the Contractor, whether voluntarily, or upon the appointment of a receiver, trustee, or assignee, or for the benefit of creditors, the Commission reserves the right and sole discretion to either cancel the Contract or affirm the Contract and hold the Contractor responsible for damages.

2.14. Warranty

The Contractor expressly warrants that all equipment, supplies, and/or services provided shall: (1) conform to each and every specification, drawing, sample or other description which was furnished to or adopted by the MHTC, (2) be fit and sufficient for the purpose expressed in the solicitation documents, (3) be merchantable, (4) be of good materials and workmanship, and (5) be free from defect. Such warranty shall survive delivery and shall not be deemed waived either by reason of the MHTC's acceptance of or payment for said equipment, supplies, and/or services.

2.15. Status of Independent Contractor

The Contractor represents itself to be an independent Contractor offering such services to the general public and shall not represent itself or its employees to be an employee of the MHTC. Therefore, the Contractor shall assume all legal and financial responsibility for taxes, FICA, employee fringe benefits, workers compensation, employee insurance, minimum wage requirements, overtime, etc., and agrees to indemnify, save and hold the MHTC, its officers, agents and employees harmless from and against any and all losses (including attorney fees) and damage of any kind related to such matters. The Contractor shall further understand that the MHTC cannot save and hold harmless or indemnify the Contractor and/or its employees against any liability incurred or arising as a result of any activity of the Contractor or any activity of the Contractor's employees performed in connection with the Contract.

2.16. Non-Waiver

If one of the parties agrees to waive its right to enforce any term of the Contract, that party does not waive its right to enforce such term at any other time or to enforce any or all other terms of the Contract.

Docusign Envelope ID: FFB00063-5087-8929-8067-CE06E5864C59

2.17. Indemnification

The Contractor shall defend, indemnify and hold harmless MHTC, including its members and department employees, from any claim or liability whether based on a claim for damages to real or personal property or to a person for any matter relating to or arising out of the Contractor's performance of its obligations under the Contract.

2.18. Right of Acceptance and/or Rejection

MoDOT reserves the right to reject any responses, and to accept or reject any items thereon, and to waive technicalities. In case of error in the extension of prices in the response, unit prices will govern.

2.19. Inspection and Acceptance

No equipment, supplies, and/or services received by MoDOT pursuant to a contract shall be deemed accepted until MoDOT has had reasonable opportunity to inspect said equipment, supplies, and/or services.

1. All equipment, supplies, and/or services which do not comply with the specifications and/or requirements or which are otherwise unacceptable or defective may be rejected. In addition, all equipment, supplies, and/or services which are discovered to be defective or which do not conform to any warranty of the contractor upon inspection (or at any later time if the defects contained were not reasonably ascertainable upon the initial inspection) may be rejected.
2. The MHTC reserves the right to return any such rejected shipment at the Contractor's expense for full credit or replacement and to specify a reasonable date by which replacements must be received.
3. The MHTCs right to reject any unacceptable equipment, supplies, and/or services shall not exclude any other legal, equitable or contractual remedies the MHTC may have.

2.20. Invoicing and Payment

The statewide financial management system has been designed to capture certain receipt and payment information. For each purchase order received, an invoice must be submitted that references the purchase order number and must be itemized in accordance with items listed on the purchase order. Failure to comply with this requirement may delay processing of invoices for payment.

1. The contractor shall not transfer any interest in the contract, whether by assignment or otherwise, without the prior written consent of the MHTC.
2. Payment for all equipment, supplies, and/or services required herein shall be made in arrears unless otherwise indicated in the IFB.
3. The MHTC assumes no obligation for equipment, supplies, and/or services shipped or provided in excess of the quantity ordered. Any unauthorized quantity is subject to the state's rejection and shall be returned at the contractor's expense.
4. The State of Missouri reserves the right to purchase goods and services using the state purchasing card.
5. The Contractor shall verify and update, if applicable, their vendor registration with their current remittance address and ACH-EFT payment information at prior to submitting a response. MHTC reserves the right to make contract payments to the Contractor through electronic funds transfer.
6. Upon a separate written request submitted along with the Contractor's response, the MHTC may

Docusign Envelope ID: FFB00063-5087-8929-8067-CE06E5864C59

elect to remit payment to the address listed in the contractor's MissouriBUYS (WebProcure/Proactis) vendor registration.

2.21. Conflict of Interest

Elected or appointed officials or employees of the State of Missouri or any political subdivision thereof, serving in an executive or administrative capacity, must comply with sections 105.452 and 105.454 RSMo, regarding conflict of interest. Additionally, section 226.090 prohibits any member of the Highways and Transportation Commission, engineer, or other person appointed or employed by the commission from having any direct or indirect pecuniary interest in, or acting as agent for, the sale of road or bridge building material, equipment, tools, machinery, or supplies or in any contract for the construction or maintenance of state highways or bridges, or the financing thereof.

1. The contractor hereby covenants that at the time of the submission of the bid the contractor has no other contractual relationships which would create any actual or perceived conflict of interest. The contractor further agrees that during the term of the contract neither the contractor nor any of its employees shall acquire any other contractual relationships which create such a conflict.

2.22. Tax Exempt Status

MHTC is exempt from paying Missouri Sales Tax, Missouri Use Tax and Federal Excise Tax. However, the Contractor may themselves be responsible for the payment of taxes on materials they purchase to fulfill the Contract.

2.23. Anti-Discrimination Against Israel Act Certification

1. If the contractor meets the definition of a company as defined in section 34.600, RSMo, and has ten or more employees, the contractor shall not engage in a boycott of goods or services from the State of Israel; from companies doing business in or with Israel or authorized by, licensed by, or organized under the laws of the State of Israel; or from persons or entities doing business in the State of Israel as defined in section 34.600, RSMo.
2. If the contractor meets the definition of a company as defined in section 34.600, RSMo, and the company's employees increases to ten or more during the life of the Contract, then the contractor shall submit to the MHTC a completed Box C of the exhibit titled, Anti-Discrimination Against Israel Act Certification, and shall comply with the requirements of Box C.
3. If during the life of the Contract, the contractor's business status changes to become a company as defined in section 34.600, RSMo, and the company has ten or more employees, then the contractor shall comply with, complete, and submit to the MHTC a completed Box C of the exhibit titled, Anti-Discrimination Against Israel Act Certification.
4. This certification shall not apply to contracts with a total potential value of less than One Hundred Thousand Dollars ($100,000).

2.24. The Domestic Products Procurement Act

This section only applies to commodity purchases greater than $25,000.00. It does not apply when bidding services.

In accordance with the Domestic Product Procurement Act (hereinafter referred to as the Buy American Act) sections 34.350 to 34.359, RSMo, the bidder is advised that any goods purchased or leased by any public agency shall be manufactured or produced in the United States.

Bidders who can certify that goods or commodities to be provided in accordance with the contract are

Docusign Envelope ID: FFB00063-5087-8929-8067-CE06E5864C59

manufactured or produced in the United States or imported in accordance with a qualifying treaty, law, agreement, or regulation shall be entitled to a ten percent (10%) preference over bidders whose products do not qualify.

The requirements of the Buy American Act shall not apply if other exceptions to the Buy American mandate in section 34.353, RSMo, are met.

If the bidder claims there is only one line of the good manufactured or produced in the United States, subsection 2 of section 34.353, RSMo, or that one of the exceptions of subsection 3 of section 34.353, RSMo, applies, the Executive Head of the Agency bears the burden of certification as required prior to the award of a contract.

In accordance with the Buy American Act, the bidder must provide proof of compliance with section 34.353, RSMo. Therefore the bidder should complete and return Exhibit N, certification regarding proof of compliance, with the bid. This document must be satisfactorily completed prior to an award of a contract.

If the lowest priced bidder qualifies as American-made or in the event of all the bidders or none of the bidders qualify for the Buy American preference, no further calculation is necessary. In the event the lowest priced bidder does not qualify for the Buy American Preference but other bidders do qualify, then the low bidder's price(s) is increased by 10% for those items not eligible for the Buy American Preference.

2.25. Drug Free Workplace

The Contractor agrees to comply with all applicable state and federal laws regarding drug-free workplaces, including but not limited to the Drug-Free Workplace Act of 1988, and shall ensure that all Contractor employees working on State property will not purchase, transfer, use or possess illegal drugs or alcohol or abuse prescription drugs in any way.

3. MoDOT IFB SPECIAL TERMS AND CONDITIONS

3.1. Specifications Terminology and Definitions

The following terminology and definitions will be used throughout this solicitation:

1. The single, tandem, and towplow trucks shall hereinafter be referred to as the "Dump Truck".
2. The Missouri Department of Transportation shall hereinafter be referred to as "MoDOT".
3. The Missouri Department of Transportation, Central Office General Services Fleet Manager shall hereinafter be referred to as the "MoDOT Fleet Manager".
4. The MoDOT Fleet Manager may appoint representatives to act on their behalf. These representatives shall hereinafter be referred to as the "MoDOT Representative".
5. Those submitting bids for this contract shall hereinafter be referred to as the "Bidder".
6. The awarded Bidder/s shall hereinafter be referred to as the "Contractor".
7. The cab and chassis franchisee or OEM providing the Dump Truck cab and chassis shall hereinafter be referred to as the "Chassis Provider".
8. The outfitter or installer of all non-chassis manufacturer installed components shall hereinafter be referred to as the "Body Builder".

Docusign Envelope ID: FFB00063-5087-8929-8067-CE06E5864C59

9. Manufacturer's suggested retail price and the process to purchase these components/items shall hereinafter be referred to as "M.S.R.P.".

3.2. IFB Questions

1. Bidders and their agents (including subcontractors, employees, consultants, or anyone else acting on their behalf) must direct all their questions or comments regarding the IFB, the evaluation, etc., to the buyer of record, Ashten Lorts, of this IFB. Bidders and their agents may not contact any other MoDOT employee regarding any of these matters during the solicitation and evaluation process. Inappropriate contacts are grounds for suspension and/or exclusion from contract award.
    a. It is preferred that questions be emailed to the buyer of record at ashten.lorts@modot.mo.gov.
2. Upon Procurement's consideration of questions and issues, if the Fleet Division determines that changes are necessary, the resulting changes will be included in a subsequently issued IFB addendum(s); absence of such response indicates that the questions issues were considered but deemed unnecessary for a IFB addendum as the questions and issues did not provide further revision or clarity to the IFB or that time was not available to provide a response. All Bidders will be advised of any change to the IFB's language, specifications, or requirements by a formal addendum to the IFB. There will be no posted written records of the questions/communications (i.e., formal question/answer document).

NOTE: The only official position of the MoDOT shall be that which is contained in the IFB and any addendums thereto.

3.3. Single Point of Contact Requirements

1. The Contractor shall act for the State as a "single point of contact" regarding all contract use issues such as ordering, invoicing, delivery, and payment.
2. As the single point of contact, the Contractor must provide a minimum of one (1) customer service representative assigned to the MoDOT State contract.
3. It is highly desirable the Contractor provide a back-up representative as well.
4. The Contractor's customer service representative and the backup, if provided, must promptly answer questions, and resolve problems that arise.
5. The Customer service representative must be available to the State during the Contractor's regular operating hours.
6. Contract representatives shall be available by phone or email.
7. The Contractor shall provide all contact information to the MoDOT Central Office (CO) General Services (GS) Buyer of Record and keep it maintained and updated through the duration of the contract.

3.4. Dump Truck Specification Compliance and Other Requirements

1. All Dump Trucks, deliverables, and services provided by the Contractor under this bid shall comply with the attached specifications and any other provisions outlined in the solicitation documents.
    a. Single Axle Dump Trucks provided under this bid shall comply with Attachment 1, Specification FL06100, Version 7.1.
    b. Tandem Axle Dump Trucks provided under this bid shall comply with Attachment 2, Specification FL07100, Version 7.1.
    c. Towplow Dump Trucks provided under this bid shall comply with Attachment 3, Specification FL07150, Version 7.1.

Docusign Envelope ID: FFB00063-5087-8929-8067-CE06E5864C59

2. In accordance with RSMo 414.365 (Missouri Revisor of Statutes - Revised Statutes of Missouri, RSMo Section 414.365), MoDOT must use fuel with a minimum biodiesel content of B-20 by submitting a response to this bid, the Bidder agrees the use of B-20 diesel fuel will not void the engine manufacturers warranty, except in cases where their use of B-20 diesel fuel is determined to be the cause of a normally warrantable failure.

3.5. District Configuration Package Requirements

The Contractor shall provide the components required for each District Configuration Package for the Single Axle, Tandem Axle, and Towplow Dump Trucks. Attachment 4, District Configuration Packages, has the District Configuration Packages listed.

3.6. Dump Truck Ordering Requirements

1. A purchase order shall be issued to the Contractor for each Dump Truck ordered.
    a. The purchase order shall identify the base item type, configuration package, and options to be provided for each Dump Truck.
    b. The prices listed on purchase orders shall be the prices listed on the current bid tabulation document.
    c. The number of days for delivery shall be in accordance with the Contractor's response in the Requirements section.
2. At any time after receipt of a purchase order, the Contractor shall notify the MoDOT Fleet Manager within three (3) business days from the time the Contractor becomes aware they are unable to fill the Dump Truck order per the terms of the contract.
    a. In the event this action is taken by the Contractor, the Contractor shall understand and agree that MoDOT reserves the right to either negotiate an extended delivery time or divert that purchase order to another Contractor who is capable of delivering the order in a timelier fashion, whichever is determined to be in the best interest of the department.
3. The contractor shall provide the Fleet Manager with a build schedule that is updated monthly listing the following:
    a. Projected and/or firm dates;
    b. Chassis build date;
    c. Chassis delivery to the Body Builder date;
    d. Dump Truck completion date; and
    e. Delivery to MoDOT date.

3.7. Pre-Delivery Inspections

1. The Chassis Provider shall perform a pre-delivery inspection as outlined in Section 1.5.1 of each attached Specification Attachment 1-3.
2. The Body Builder shall perform a pre-delivery inspection as outlined in Section 1.5.2 of each attached Specification Attachment 1-3.
3. MoDOT reserves the right to perform a pre-delivery inspection at the final assembly point as outlined in Section 1.5.3 of each attached Specification Attachment 1-3.

3.8. Delivery-Additional Requirements

1. The following delivery requirements apply to all Dump Trucks, deliverables, and services provided by the Contractor under this bid.

Docusign Envelope ID: FFB00063-5087-8929-8067-CE06E5864C59

2. Each Delivered Dump Truck, including all standard, optional, and M.S.R.P. components/items, shall be thoroughly pressure washed with hot water and detergent prior to delivery.
    a. Dump Trucks, optional, and/or M.S.R.P. components/items with hydraulic oil from assembly on any component are not acceptable.
3. Delivery of Dump Trucks shall be coordinated with a MoDOT Representative at the receiving location.
4. The Contractor shall give a minimum of 24 hours advance notice before delivery of a Dump Truck.
    a. If a delivery is being made on the first working day of a week, notice shall be given on or before the last working day of the previous week.
    b. Delivery of an item shall only be received between the hours of 8:00 A.M. to 3:00 P.M., Monday through Friday.
5. Each delivered Dump Truck shall have the listed minimum levels maintained at all times during delivery, up to and including the time possession of the Dump Truck is transferred to MoDOT:
    a. Minimum of ¼ tank of fuel.
    b. Minimum of ¼ tank of DEF.
6. No deliveries will be made on Saturdays, Sundays and holidays.
7. Deliveries shall not be made on weekends or observed holidays as identified below unless specifically authorized by the department representative. The following days shall be construed as official holidays under the terms of the contract:
    a. January 1 - New Year's Day
    b. Third Monday in January - Martin Luther King, Jr.s Birthday
    c. February 12-Lincoln's Birthday
    d. Third Monday in February - Washington's Birthday
    e. May 8 - Truman's Birthday
    f. Last Monday in May-Memorial Day
    g. June 19th – JuneTeenth
    h. July 4 - Independence Day
    i. First Monday in September - Labor Day
    j. Second Monday in October-Columbus Day
    k. November 11 - Veteran's Day
    l. Fourth Thursday in November - Thanksgiving Day
    m. December 25 - Christmas Day
8. When any of the above holidays falls on a Sunday, the holiday will be observed on the following Monday; when any of the above holidays falls on a Saturday, the holiday will be observed on the immediately preceding Friday.

3.9. Post-Delivery Inspections

1. MoDOT reserves the right to perform a transit/shipping damage inspection of each delivered Dump Truck as specified in Section 1.7.1 of each attached Specification Attachments 1-3.
    a. MoDOT shall have five (5) business days after receipt of each delivered Dump Truck to inspect for damage received during transit/shipping to the receiving location.
    b. Signing of the delivery receipt by a MoDOT Representative does not release the Contractor or a sub-contractor from responsibility for damage to the Dump Truck that was un-observed or concealed at the time of receipt of the Dump Truck by MoDOT.
    c. Findings of damage believed to be from transit/shipping of the Dump Truck shall be listed and communicated to the Contractor.

Docusign Envelope ID: FFB00063-5087-8929-8067-CE06E5864C59

i. The Contractor and/or sub-contractor shall, at their expense, address the listed damage to the satisfaction of the MoDOT Representative/s before the damaged Dump Truck is accepted.

2. MoDOT reserves the right to perform a post-delivery inspection of each delivered Dump Truck as specified in Section 1.7.2 of each attached Specification Attachments 1-3.
    a. This inspection shall be of the entire Dump Truck including all standard, optional, and M.S.R.P. components/items.
    b. Discrepancies and/or findings of non-compliance with published specifications, and/or issues of poor-quality workmanship shall be listed and communicated to the Contractor and/or Body Builder.
        i. The Contractor and/or Body Builder shall, at their expense, address the listed items to the satisfaction of the MoDOT Representative/s before each delivered Dump Truck is accepted.

3.10. Liquidated Damages

In the event the successful Contractor fails to deliver the material within the time specified, the Department and the public will sustain damages because of such delay in delivery, the exact extent of which would be difficult to ascertain, and in order to liquidate such damage in advance it is agreed that the **sum of $50.00 per day, per item**, for each assessable calendar day on which the delivery has not been completed, is reasonable and the best estimate which the parties can arrive at as liquidated damages, and it is therefore agreed that said amount will be withheld from payments due the Contractor or otherwise collected from the Contractor as liquidated damages.

1. Saturdays, Sundays, holidays and days whereas the Department has suspended work shall not be assessable days.

3.11. Increase or Decrease Quantities

The quantities listed are MoDOT's best estimate of needs at the time of the solicitation posting. MoDOT reserves the right to increase or decrease quantities. The final quantity ordered by MoDOT shall be furnished at the unit price bid.

3.12. Insurance - General Delivery / Drop Off Services

The Contractor shall acquire and maintain adequate liability insurance in the form(s) and amount(s) sufficient to protect the MHTC, including its members and department employees, against any such loss, damage and/or expense related to performance under the contract. Self-insurance coverage or another alternative risk financing mechanism may be utilized provided that such coverage is verifiable and irrevocably reliable and the MHTC and the Missouri Department of Transportation are protected as an additional insured.

General and other non-professional liability insurance shall include an endorsement that adds the MHTC and the Missouri Department of Transportation as an additional insured.

In the event any insurance coverage is canceled, MHTC must be notified within forty-five (45) calendar days. The address for Additional Insured status on the certificate of insurance or endorsement shall be: MHTC/MoDOT, 105 W. Capitol Avenue, PO Box 270, Jefferson City, MO 65102

3.13. Components/Items Purchased Using M.S.R.P.

Docusign Envelope ID: FFB00063-5087-8929-8067-CE06E5864C59

A Contractor may receive requests from an ordering district for components and/or items that were not in the attached specifications or part of a Bidders Bid Submission. The percent off M.S.R.P. (% off MSRP) will be used to purchase "Optional Equipment" not specified in section 8 of the attached Specifications Attachments 1-3. This discount shall be applied to the Contractors invoice for only those options not identified in this solicitation.

1. Pricing for these components and/or items shall be based on the actual M.S.R.P. of the components and/or items reduced by the % off MSRP submitted in the Line Items Section of the IFB.
2. Responses to the requesting district for M.S.R.P. pricing shall:
    a. Be sent as a separate document or attachment to the receiving district.
    b. Be on the Contractor or Body Builders letterhead.
    c. Contain the actual M.S.R.P.
    d. Contain the MoDOT purchase price based on the percentage off listed in the Line Items Section of the IFB.

3.14. Contract Period

The contract period will be from Notice of Contract Award through October 31, 2026.

3.15. Invoicing and Payment Requirements

1. The Contractor shall maintain full ownership of the Dump Truck up to the time ownership of the Dump Truck is transferred to MoDOT.
    a. The transfer of ownership of each Dump Truck shall occur when the final acceptance documents are completed by the MoDOT Representative.
    b. Any progress payment/s to the Contractor shall not reduce the level of the Contractor's ownership of any portion of the Dump Truck.
2. All payments shall be made to the Contractor.
    a. Payment/s to subcontractor/s are the responsibility of the Contractor.
    b. The sum of progress payment/s and the final payment to the Contractor shall equal the total amount stated on the most recent purchase order.
3. Progress payments shall be issued as the Contractor meets the following conditions. Contractor shall maintain full ownership of the unit until it is complete and delivered to the MoDOT location regardless of progress payments.
    a. Delivery of the Dump Truck cab and chassis to the Body Builder.
        i. The Contractor shall notify the MoDOT Fleet Manager of the delivery of each Dump Truck cab and chassis to the Body Builder's location.
            A. The MoDOT Fleet Manager shall direct a MoDOT Representative to verify delivery of each cab and chassis.
        ii. For each Dump Truck cab and chassis delivered, the Contractor shall submit a complete invoice for the respective Dump Truck to MoDOT. Invoice shall be on the Contractor's business letter head invoice form including, but not limited to:
            A. A unique invoice number.

Docusign Envelope ID: FFB00063-5087-8929-8067-CE06E5864C59

B. The entire purchase order number.
C. MoDOT Unit Number.
D. Complete VIN.
E. Receiving district.
F. An itemized list of charges that reflect the items listed on the most recent purchase order.
G. The total purchase price listed on the most recent purchase order.
H. The amount of the progress payment for the cab and chassis.
I. The remaining balance.

iii. Invoices failing to contain the minimum items listed above shall be rejected and returned to the Contractor.
iv. Upon receipt of the invoice, and verification of delivery of the cab and chassis the MoDOT Fleet Manager shall initiate the cab and chassis progress payment process.

b. Certain conditions may occur in which the MoDOT Fleet Manager can elect to make an additional progress payment to the Contractor. Conditions may include, but are not limited to:

i. The delivery date of the completed Dump Truck to the receiving district is anticipated to be after the end of MoDOT's fiscal year.
ii. The delivery date of the completed Dump Truck to the receiving district is anticipated to be more than 120 days after the delivery date of the cab and chassis to the Body Builder.

A. Occurrence of these or other conditions is not a guarantee that an additional progress payment to the Contractor will be made.

iii. The MoDOT Fleet Manager shall notify the Contractor of such decision.

A. Communications between the Contractor and the MoDOT Fleet Manager shall determine the amount of the additional progress payment.

iv. The Contractor shall submit the same invoice as outlined in Section 3.14 3. a. ii. of this IFB updated with:

A. A brief description of the progress made.
B. The amount of the additional progress payment.
C. The new remaining balance.

v. Invoices failing to contain the minimum items listed above shall be rejected and returned to the Contractor.
vi. The MoDOT Fleet Manager may elect to direct a MoDOT Representative to verify the additional progress towards completion of the Dump Truck.
vii. Upon receipt of the updated invoice, and any required verification of additional progress made the MoDOT Fleet Manager shall initiate the additional progress payment process.

4. The Contractor shall, upon delivery of each completed Dump Truck to the receiving district, issue a final invoice to MoDOT for each individual Dump Truck.

a. The final invoice shall be the last invoice submitted to MoDOT as described in either Section 3.14 3. a. ii. or Section 3.14 3. a. iv. of this IFB, updated with all progress payments received and the final remaining balance.

Docusign Envelope ID: FFB00063-5087-8929-8067-CE06E5864C59

b. Invoices failing to contain the minimum items listed above shall be rejected and returned to the Contractor.

5. Specific Contractor final payment process conditions.

a. Final payment for each delivered Dump Truck is contingent upon the acceptance of each Dump Truck individually by the MoDOT Representative.

i. All noted issues with each delivered Dump Truck shall be corrected to the satisfaction of the MoDOT representative before the Dump Truck is accepted.
ii. After acceptance of each delivered Dump Truck, the final payment process will be initiated.
iii. MoDOT shall not be obligated to issue Contractor payment for components/items supplied in addition/error to those required on the purchase order.

3.16. Escalation Clause

A price increase that is not mutually agreed to by the parties constitutes a material breach of the agreement. In the event the Contractor requests a price increase during the contract period (original contract period or contract renewal period), the Contractor must provide a written request and documentation justifying the need for a price increase, and the amount of such price increase. MoDOT will review the Contractor's written request and documentation and decide if a price increase is to be granted. The Contractor and shall understand and agree, MoDOT's decision to allow or reject the Contractor's amendments to the contract terms shall be final and without recourse.

1. No price increase shall be granted during the first six (6) months of the original contract period, or if applicable, first six (6) months of a contract renewal or escalation.
2. No price increase shall be granted on goods or services already obligated by a Purchase Order or State issued P Card.

The MHTC recognize the impact from tariffs. In the event the Contractor requests a price increase due to a tariff, the Contractor must submit a written request including:

1. Identify and provide the tariff impacting your product(s). Provide a copy of the tariff including the language.
2. Identify and provide the aspect within that tariff that is impacting your product, it's relevance to your components or units.
3. Explain what prohibits you from holding your pricing due to its impact.

MoDOT will review the Contractor's written request and documentation and decide if a price increase is to be granted. The Contractor and shall understand and agree that MoDOT's decision to allow or reject the Contractor's requested amendments to the contract terms shall be final and without recourse.

3.17. Additional Requirements

1. Notification of contract award will be at the time the final bid tabulation is posted on the MissouriBUYS website. It is the sole responsibility for all Bidders to check the website for bid results.

a. The prices from each awarded Bidder's Submission shall be listed in the bid tabulation document.
b. No award is final until formally approved by MoDOT.

Docusign Envelope ID: FFB00063-5087-8929-8067-CE06E5864C59

c. It is the sole responsibility of all Bidders to check the bid results on the MissouriBUYS website.

2. For each Dump Truck the Contractor delivers, said Contractor shall be responsible for the Dump Truck in its entirety.
    a. The Contractor shall ensure that each delivered Dump Truck in its entirety is compliant with all specifications listed herein.
    b. The Contractor shall be responsible for the installation and/or attachment of all Body Builder components/items to the cab and chassis.
    c. The Contractor shall be responsible for all performance requirements of each delivered Dump Truck.
    d. In the event a sub-contractor or vendor of the Contractor fails to resolve an issue with the Dump Truck, the Contractor shall be responsible.
    e. The contractor and Body Builder shall furnish all materials, labor, facilities, equipment, and supplies necessary to provide the deliverables/services required herein.
3. MoDOT reserves the right to make contract payments to the Contractor through electronic funds transfer.
    a. Each Contractor's invoice shall be on the Contractor's business letterhead invoice form and shall contain a unique invoice number (reference Section 3.15 of the IFB for more detailed information on invoicing and payment requirements).
        i. The invoice number will be listed on the state's Vendor Payment Website to enable the Contractor to properly apply state payment to invoices.
    b. The Contractor shall comply with all other invoicing requirements stated in the IFB.
4. MoDOT reserves the right to obtain "like" or "similar" products as specified herein from other manufacturers, exclusive of the Dump Truck contract, when use of such products is deemed in the best interest of MoDOT.

4. BID SUBMISSION INFORMATION

4.1. Required Information

1. The items required in Section 1.4.3 of each attached Specification Attachments 1-3 should be provided by the Bidder for each base item Bid Submission. Documentation submitted shall be based on the Specification Attachments 1-3 as written. Acceptable document formats are PDF, Word, or Excel.
    a. Representative chassis line sheet or chassis proposal document.
    b. Engineering drawings detailing the following:
        i. Projected weight of the base Dump Truck with no options.
        ii. Overall dimensions of the Dump Truck.
        iii. Clearances surrounding the components between the chassis cab and the front of the dump body.
        iv. Dimensions of the dump body overhang at the rear of the Dump Truck.
        v. Advertised wheelbase of the Dump Truck.
        vi. Overall bridge law wheelbase (center of the steering axle to the center of the rear drive axle) for the tandem Dump Trucks only.
        vii. The weight each option listed in Section 8 of each attached Specification Attachments 1-3 adds to the base Dump Truck if the option adds 200 pounds or more to the weight of the base Dump

Docusign Envelope ID: FFB00063-5087-8929-8067-CE06E5864C59

Truck.

2. Prices submitted for each base Dump Truck and options shall be based on each attached Specifications Attachments 1-3 as described in Section 1.4.1 and Section 1.4.2.
3. The Bidder is not required to bid on all base bid items or subsequent line items of the Dump Truck Pricing Sheet in the IFB. However, the Bidder must submit a base bid item price in order for subsequent line items' pricing to be valid for award. For each base bid item in the Dump Truck Pricing Sheet in the IFB, Bidders may only submit one (1) chassis make, which may be submitted with multiple Body Builders. Bidders shall not have more than four (4) submission for each base bid item.
    a. Each price submitted by the Bidder shall be in whole dollar increments.
        i. MoDOT is asking for a base Chassis plus Base Body pricing on the Base line item. The other line items in that group, MoDOT is asking for options pricing for each Dump Truck.
        ii. The Bidder is instructed in the Requirements Section to identify the body builder.
    b. Should the Bidder choose not to bid on a line item, the Bidder should write "NO BID" for the line item.
    c. If a line item is a deduction in the Dump Truck Pricing Sheet in the IFB, the price must be stated as a negative number.
    d. The Bidder shall submit option pricing in the Dump Truck Pricing Sheet.
    e. If an option is standard on the base bid item, the Bidder shall state "standard" in that line item in the Dump Truck Pricing Sheet.
4. The bidder must enter $0.00 in the line-item section of the IFB, but the award/evaluation shall be based on the firm, fixed price quoted in the Dump Truck Pricing Sheet.

5. EVALUATION AND AWARD CRITERIA

5.1. Evaluation Criteria

The following factors shall be considered in the evaluation of the proposals:

1. Evaluation Criteria - Any agreement for services Resulting from this IFB shall be awarded to the Offeror providing the best proposal to MHTC. After determining responsiveness, the proposals will be evaluated in accordance with the following criteria and maximum points per each criterion:
    a. Base and Options Costs - 50 points
    b. Warranty Coverage/Unit Features that Improve Performance, Strength, Reliability & Longevity - 20 points
    c. Location of Parts and Servicing Dealers and the Contractor's Past Performance - 25 points
    d. Delivery Timeline - 5 points
2. The evaluation of base and options costs will be conducted using a scale of fifty (50) possible points based upon the following formula:
    1. (Lowest Responsive Price / Price of Bidder Being Evaluated) X 50 = Points Awarded to Bidder Being Evaluated
3. Historic Information - MHTC reserves the right to consider historic information and facts, whether gained from the Offeror's proposal, presentations or interviews as applicable, references, or other sources, including but not limited to the listed subcontractors, in the evaluation process.

Docusign Envelope ID: FFB00063-5087-8929-8067-CE06E5864C59

4. Responsibility to Submit Information - Each Offeror is cautioned that the Offeror's sole responsibility to submit information related to the evaluation criteria and MHTC is under no obligation to solicit such information if it is not included with the Offeror's proposal. Failure of the Offeror to solicit such information may cause an adverse impact on the evaluation of the Offeror's proposal.

5.2. Award Criteria

1. This is a Multiple Award bid and there will be no "one" bidder awarded each item within this bid.
2. Determination of Responsiveness - Any proposal which does not comply with the mandatory requirements of the IFB will be determined to be non-responsive and will not be considered for an award.
3. Determination of Responsibility and Reliability - MoDOT shall determine the responsibility and reliability of the responsive bidder.
    a. MoDOT reserves the right to reject any bid submission for reasons which may include but not be limited to the following:
        i. Failure of the Bidder to meet mandatory general performance specifications; and/or
        ii. Failure of the Bidder to meet mandatory technical specifications; and/or
        iii. Receipt of any information, from any source, regarding delivery of unsatisfactory product or service by the Bidder within the past three (3) years. As deemed in its best interests, MoDOT reserves the right to clarify any and all portions of any Bidder's response.
4. Determination of Award - The contracts will be awarded to the responsive, responsible and reliable Bidders determined as specified in the award criteria.
5. MoDOT reserves the right to reject any or all bids, and to reject any items therein, and to waive compliance based on minor technicalities. No award is final until formally approved by MoDOT.
6. It is the sole responsibility for all Bidders to check the MissouriBUYS website (missouribuys.mo.gov) for bid results.

Docusign Envelope ID: FFB00063-5087-8929-8067-CE06E5864C59

Award Report

Solicitation Details	
Business Unit	31-MODOT TRANSPORTATION
Solicitation	MODOT 0000000008SL,1
Solicitation Description	MoDOT Statewide FY26 - Dump Truck 2027 Models - Multiple Award
Open Date	10/22/2025
Close Date	11/24/2025
Buyer	ASHTEN LORTS
Buyer Phone	
Buyer E-Mail	ASHTEN.LORTS@MODOT.MO.GOV

Solicitation Award Details	

Award Summary

Awarded Supplier(s) 11

Supplier(s)	Response Number	No Bid Response	Awarded	Total Response Amount	Total Award Amount
Custom Truck One Source, Inc	28180		Yes	220,985.00	220,985.00
Midway Freightliner, Inc	28237		Yes	0.00	0.00
Midway Western Star, Inc.	28229		Yes	0.00	0.00
Murphy-Hoffman Company, LLC	28260		Yes	135,500.00	135,500.00
Nextran Truck Centers	28269		Yes	0.00	0.00
PREMIER TRUCK GROUP OF COLUMBIA	28089		Yes	0.00	0.00
PTG Missouri LLC	28097		Yes	0.00	0.00
Rush Truck Centers of Missouri, Inc	28007		Yes	0.00	0.00
TAG Truck Enterprises of Missouri, LLC	25710		Yes	0.00	0.00
Truck Centers Inc	28232		Yes	166,684.00	166,684.00
VANGUARD TRUCK CENTERS - ST. LOUIS, MO	28235		Yes	194,680.00	194,680.00

Award Details by Line Item

Award Report

Response Items	Custom Truck One Source, Inc-28180	Midway Freightliner, Inc-28237	Midway Western Star, Inc.-28229	Murphy-Hoffman Company, LLC-28260	Nextran Truck Centers-28269	PREMIER TRUCK GROUP OF COLUMBIA-28089
1. Dump Truck						
Award Quantity (UOM)	(EACH)	(EACH)	(EACH)	(EACH)	(EACH)	(EACH)
Award Unit Price	220,985	0	0	135,500	0	0
Total Award Amount	220,985	0	0	135,500	0	0

Response Items	PTG Missouri LLC-28097	Rush Truck Centers of Missouri, Inc-28007	TAG Truck Enterprises of Missouri, LLC-25710	Truck Centers Inc-28232	VANGUARD TRUCK CENTERS - ST. LOUIS, MO-28235
1. Dump Truck					
Award Quantity (UOM)	(EACH)	(EACH)	(EACH)	(EACH)	(EACH)
Award Unit Price	0	0	0	166,684	194,680
Total Award Amount	0	0	0	166,684	194,680

Docusign Envelope ID: FFB00063-5087-8929-8067-CE06E5864C59

Single Axle Information	Body Builder's Company Name and Chassis Model Description	
Bidder Company Name	PREMIER TRUCK GROUP OF COLUMBIA	
Bidder Contact Name	MIKE TALLEUR	
Bidder Contact Email	MTALLEUR@PREMIERTRUCK.COM	
Bidder Contact Phone	573-303-7725	
	Option 1	Option 2
Chassis Model	WESTERN STAR 47X	N/A
Body Builder's Company Name	HENDERSON PRODUCTS	VIKING-CIVES
Base Bid Item: Single Axle Cab/Chassis Reference specification 'Single	$ 183,485	$ 180,323
Engine Make	CUMMINS	CUMMINS
Engine Model	L9	L9
Engine Horse Power	300	300
Engine Torque	860 LB-FT	860 LB-FT
Corrosion Proof Oil Pan	NA	NA
Stainless Steel Transmission Cooler, Lines	NA	NA
Configuration Package 1 - Northwest District	$ 45,455	$ 42,935
Accssory Control Type	*Hardwired*	
Tarp Make & Model	*Aero Easy Cover*	
LED Warning Light Make	*Whelen*	
Spreader Controller Make & Model	*Force America 5100EX*	
Hydraulic Control Lever Type	*Air*	
Surface Temperature Sensor	*Precise ARC Wireless*	
Backup Camera Make & Model	*ECCO EC7000-QM*	
Number of Rear Facing Cameras	*1*	
Loop Mode Configuration	*Closed*	
Glad-Hand Configuration	*90 degree elbows, 10" hoses, installed*	
Configuration Package 2 - Northeast District	$ 49,878	NO BID
Accssory Control Type	*Hardwired*	
Tarp Make & Model	*US Tarp/Unbreakable Arms*	
LED Warning Light Make	*Whelen*	
Spreader Controller Make & Model	*Bosch CS660*	

Docusign Envelope ID: FFB00063-5087-8929-8067-CE06E5864C59

Hydraulic Control Lever Type	*Single Multifunction Joystick*		
Surface Temperature Sensor	*Roadwatch*		
Backup Camera Make & Model	*ECCO EC7000-QM*		
Number of Rear Facing Cameras	*1*		
Loop Mode Configuration	*Closed*		
Glad-Hand Configuration	*90 degree elbows, 10" hoses, installed*		
Configuration Package 3 - Kansas City District		**$ 45,170**	**NO BID**
Accssory Control Type	*Hardwired*		
Tarp Make & Model	*US Tarp/Unbreakable Arms*		
LED Warning Light Make	*Whelen*		
Spreader Controller Make & Model	*Bosch CS660*		
Hydraulic Control Lever Type	*Air*		
Surface Temperature Sensor	*Roadwatch*		
Backup Camera Make & Model	*ECCO EC7000-QM*		
Number of Rear Facing Cameras	*1*		
Loop Mode Configuration	*Closed*		
Glad-Hand Configuration	*90 degree elbows, 10" hoses, installed*		
Configuration Package 4 - Central District		**$ 44,412**	**$ 41,495**
Accssory Control Type	*Multiplexed*		
Tarp Make & Model	*Aero Easy Cover*		
LED Warning Light Make	*Whelen*		
Spreader Controller Make & Model	*Force America 5100EX*		
Hydraulic Control Lever Type	*Manual Cable*		
Surface Temperature Sensor	*PreCise ARC Wireless*		
Backup Camera Make & Model	*ECCO EC7000-QM*		
Number of Rear Facing Cameras	*2*		
Loop Mode Configuration	*Closed*		
Glad-Hand Configuration	*Plugged bulkheads, 90 degree elbows, 10" hoses, parts in toolbox*		

Docusign Envelope ID: FFB00063-5087-8929-8067-CE06E5864C59

Configuration Package 5 - St. Louis District		**$ 52,763**	**$ 49,715**
Accssory Control Type	*Hardwired*		
Tarp Make & Model	*Shurco*		
LED Warning Light Make	*Noslo*		
Spreader Controller Make & Model	*Force America 6100*		
Hydraulic Control Lever Type	*Manual Cable*		
Surface Temperature Sensor	*PreCise ARC Wireless*		
Backup Camera Make & Model	*ECCO EC7000-QM*		
Number of Rear Facing Cameras	*2*		
Loop Mode Configuration	*Closed*		
Glad-Hand Configuration	*Plugged bulkheads, no elbows or hoses, parts in toolbox*		
Configuration Package 6 - Southwest District		**$ 46,053**	**$ 43,085**
Accssory Control Type	*Multiplexed*		
Tarp Make & Model	*Aero Easy Cover*		
LED Warning Light Make	*Whelen*		
Spreader Controller Make & Model	*Force America 5100EX*		
Hydraulic Control Lever Type	*Air*		
Surface Temperature Sensor	*PreCise ARC Wired*		
Backup Camera Make & Model	*ECCO EC7000-QM*		
Number of Rear Facing Cameras	*1*		
Loop Mode Configuration	*Closed*		
Glad-Hand Configuration	*Plugged bulkheads, 90 degree elbows, 10" hoses, parts in toolbox*		
Configuration Package 7 - Southeast District		**$ 49,346**	**$ 47,475**
Accssory Control Type	*Hardwired*		
Tarp Make & Model	*Aero Easy Cover*		
LED Warning Light Make	*Whelen*		
Spreader Controller Make & Model	*Force America 6100*		
Hydraulic Control Lever Type	*Manual Cable*		
Surface Temperature Sensor	*PreCise ARC Wireless*		
Backup Camera Make & Model	*ECCO EC7000-QM*		

Docusign Envelope ID: FFB00063-5087-8929-8067-CE06E5864C59

Number of Rear Facing Cameras	*1*		
Loop Mode Configuration	*Closed*		
Glad-Hand Configuration	*Plugged bulkheads, 90 degree elbows, 10" hoses, parts in toolbox*		
MSRP Replacement Parts		**PTG of COMO 20% off List Price. Viking Cives 25%**	

Docusign Envelope ID: FFB00063-5087-8929-8067-CE06E5864C59

Single Axle Options Pricing		
Bidder Company Name	PREMIER TRUCK GROUP OF COLUMBIA	
	Option 1	Option 2
OPTION 1 CREW CAB	NO BID	NO BID
OPTION 2 HEATED WINDSHIELD	$ 491	$ 491
OPTION 3 ENGINE BRAKE	$ 49	$ 49
OPTION 4 ARCTIC FOX FUEL TANK HEATER	$ 977	$ 977
OPTION 5 INSTALL 50-WATT MODOT OWNED 2-WAY RADIO	$ 912	$ 400
OPTION 6 INSTALL 100-WATT MODOT OWNED 2-WAY RADIO	$ 912	$ 400
OPTION 7 CRASH ATTENUATOR WIRING- SL CMS	$ 1,936	$ 1,760
OPTION 8 CRASH ATTENUATOR WIRING- SL CMS AND AFAD	$ 2,158	$ 1,962
OPTION 9 CRASH ATTENUATOR WIRING- SW CMS, PANIC, HYD LIFT	$ 2,582	$ 2,347
OPTION 10 AUTOMATIC TIRE CHAINS	$ 4,053	$ 3,610
OPTION 11 RECEIVER PINTLE HITCH	$ 1,789	$ 975
OPTION 12 TMA POCKETS	$ 617	$ 785
OPTION 13 PROTECTIVE FLOORBOARD LINING	$ 2,211	$ 1,550
OPTION 14 MOLDED FLOOR MATS	$ 145	$ 145

Docusign Envelope ID: FFB00063-5087-8929-8067-CE06E5864C59

OPTION 15 CORTEN STEEL DUMP BODY	No Bid	$ (2,225)
OPTION 16 STAINLESS STEEL LONG SILLS	Standard	$ 1,235
OPTION 17 STRUCTURAL STEEL I-BEAM LONG SILLS	$ (2,104)	NO BID
OPTION 18 TOP RAIL FOR PROVIDED DUMP BODY	$ 1,142	$ 1,210
OPTION 19 AR400 TAILGATE SHEET	$ 367	$ 295
OPTION 20 SHOVEL TOOL BOX	$ 1,840	$ 1,700
OPTION 21 PAVER LIP	$ 577	$ 725
OPTION 22 FOLD-DOWN PAVER LIP	$ 784	$ 1,395
OPTION 23 DUMP BODY SHAKER	$ 1,807	$ 1,295
OPTION 24 AUXILIARY HYDRAULIC ACCESSORY CIRCUIT	$ 2,578	$ 1,710
OPTION 25 ACCESSORY CIRCUIT HYDRAULIC HOSES TO FRONT OF DUMP TRUCK	$ 707	$ 698
OPTION 26 LED WARNING LIGHT SYSTEM CONTROL PANEL	$ 1,008	$ 656
OPTION 27 RIGHT-HAND MID-MOUNT WING SNOWPLOW	$ 15,863	$ 14,950
OPTION 28 LEFT-HAND MID-MOUNT WING SNOWPLOW	$ 15,935	$ 14,950

Docusign Envelope ID: FFB00063-5087-8929-8067-CE06E5864C59

OPTION 29 UNDERBODY SCRAPER FOR CREW CAB TRUCKS ONLY	No Bid	No Bid
OPTION 30 12-FOOT FRONT SNOWPLOW	$ 9,767	$ 9,575
OPTION 31 REMOVABLE BASE ANGLE FOR A 12-FOOT FRONT SNOWPLOW	$ 971	$ 745
OPTION 32 42-INCH MOLDBOARD HEIGHT FOR A 12-FOOT FRONT SNOWPLOW	$ 169	$ 755
OPTION 33 JOMA CUTTING EDGE SYSTEM FOR A 12-FOOT FRONT SNOWPLOW	$ 6,118	$ 6,815
OPTION 34 14-FOOT FRONT SNOWPLOW	$ 11,694	$ 11,618
OPTION 35 REMOVABLE BASE ANGLE FOR A 14-FOOT FRONT SNOWPLOW	$ 1,432	$ 780
OPTION 36 42-INCH MOLDBOARD HEIGHT FOR A 14-FOOT FRONT SNOWPLOW	$ 262	$ 795
OPTION 37 JOMA CUTTING EDGE SYSTEM FOR A 14-FOOT FRONT SNOWPLOW	$ 8,884	$ 7,695
OPTION 38 10-FOOT DRAG CHAIN SPREADER WITH STAND	$ 23,765	$ 24,655
OPTION 39 DRAG CHAIN CROSSBARS WELDED TO EVERY CHAIN LINK	$ 291	$ 1,310

Docusign Envelope ID: FFB00063-5087-8929-8067-CE06E5864C59

OPTION 40 10-FOOT SINGLE AUGER SPREADER WITH STAND	$ 26,588	$ 24,991
OPTION 41 10-FOOT DUAL AUGER SPREADER WITH STAND	$ 26,044	$ 27,215
OPTION 42 FEEDER DRIVE FEEDBACK SENSOR ON THE OPTIONED SPREADER	$ 365	$ 365
OPTION 43 SIDE DEFLECTOR CURTAINS ON THE OPTIONED SPREADER	$ 893	$ 1,535
OPTION 44 LIQUID TANKS ON THE OPTIONED SPREADER	$ 2,120	$ 2,545
OPTION 45 GRANULAR PRE-WET SYSTEM	$ 9,503	$ 7,857
OPTION 46 ANTI-ICE SYSTEM	$ 4,652	$ 5,150
OPTION 47 DELETE BODY BUILDER INSTALLED COMPONENTS	$ (50,812)	$ (47,650)

Docusign Envelope ID: FFB00063-5087-8929-8067-CE06E5864C59

Tandem Axle Information		Body Builder's Company Name and Chassis Model Description	
Bidder Company Name		PREMIER TRUCK GROUP OF COLUMBIA	
Bidder Contact Name		MIKE TALLEUR	
Bidder Contact Email		MTALLEUR@PREMIERTRUCK.COM	
Bidder Contact Phone		573-303-7725	
		Option 1	Option 2
Chassis Model		WESTERN STAR 47X	N/A
Body Builder's Company Name		HENDERSON PRODUCTS	VIKING-CIVES
Base Bid Item: Tandem Axle Cab/Chassis Reference specification 'Tandem		$ 203,764	$ 200,332
Engine Make		CUMMINS	CUMMINS
Engine Model		L9	L9
Engine Horse Power		370	370
Engine Torque		1250 LB-FT	1250 LB-FT
Corrosion Proof Oil Pan		NA	NA
Stainless Steel Transmission Cooler, Lines		NA	NA
Configuration Package 1 - Northwest District		$ 45,548	$ 42,935
Accssory Control Type	*Hardwired*		
Tarp Make & Model	*Aero Easy Cover*		
LED Warning Light Make	*Whelen*		
Spreader Controller Make & Model	*Force America 5100EX*		
Hydraulic Control Lever Type	*Air*		
Surface Temperature Sensor	*Precise ARC Wireless*		
Backup Camera Make & Model	*ECCO EC7000-QM*		
Number of Rear Facing Cameras	*1*		
Loop Mode Configuration	*Closed*		
Glad-Hand Configuration	*90 degree elbows, 10" hoses, installed*		
Configuration Package 2 - Northeast District		$ 50,928	NO BID
Accssory Control Type	*Hardwired*		
Tarp Make & Model	*US Tarp/Unbreakable Arms*		
LED Warning Light Make	*Whelen*		
Spreader Controller Make & Model	*Bosch CS660*		
Hydraulic Control Lever Type	*Single Multifunction Joystick*		
Surface Temperature Sensor	*Roadwatch*		

Docusign Envelope ID: FFB00063-5087-8929-8067-CE06E5864C59

Backup Camera Make & Model	*ECCO EC7000-QM*		
Number of Rear Facing Cameras	*1*		
Loop Mode Configuration	*Closed*		
Glad-Hand Configuration	*90 degree elbows, 10" hoses, installed*		
Configuration Package 3 - Kansas City District		**$ 46,259**	**NO BID**
Accssory Control Type	*Hardwired*		
Tarp Make & Model	*US Tarp/Unbreakable Arms*		
LED Warning Light Make	*Whelen*		
Spreader Controller Make & Model	*Bosch CS660*		
Hydraulic Control Lever Type	*Air*		
Surface Temperature Sensor	*Roadwatch*		
Backup Camera Make & Model	*ECCO EC7000-QM*		
Number of Rear Facing Cameras	*1*		
Loop Mode Configuration	*Closed*		
Glad-Hand Configuration	*90 degree elbows, 10" hoses, installed*		
Configuration Package 4 - Central District		**$ 44,412**	**$ 41,495**
Accssory Control Type	*Multiplexed*		
Tarp Make & Model	*Aero Easy Cover*		
LED Warning Light Make	*Whelen*		
Spreader Controller Make & Model	*Force America 5100EX*		
Hydraulic Control Lever Type	*Manual Cable*		
Surface Temperature Sensor	*PreCise ARC Wireless*		
Backup Camera Make & Model	*ECCO EC7000-QM*		
Number of Rear Facing Cameras	*2*		
Loop Mode Configuration	*Closed*		
Glad-Hand Configuration	*90 degree elbows, 10" hoses, installed*		
Configuration Package 5 - St. Louis District		**$ 52,763**	**$ 49,715**
Accssory Control Type	*Hardwired*		
Tarp Make & Model	*Shurco*		
LED Warning Light Make	*Noslo*		

Docusign Envelope ID: FFB00063-5087-8929-8067-CE06E5864C59

Spreader Controller Make & Model	*Force America 6100*		
Hydraulic Control Lever Type	*Manual Cable*		
Surface Temperature Sensor	*PreCise ARC Wireless*		
Backup Camera Make & Model	*ECCO EC7000-QM*		
Number of Rear Facing Cameras	*2*		
Loop Mode Configuration	*Closed*		
Glad-Hand Configuration	*90 degree elbows, 10" hoses, installed*		
Configuration Package 6 - Southwest District		**$ 46,053**	**$ 43,085**
Accssory Control Type	*Multiplexed*		
Tarp Make & Model	*Aero Easy Cover*		
LED Warning Light Make	*Whelen*		
Spreader Controller Make & Model	*Force America 5100EX*		
Hydraulic Control Lever Type	*Air*		
Surface Temperature Sensor	*PreCise ARC Wired*		
Backup Camera Make & Model	*ECCO EC7000-QM*		
Number of Rear Facing Cameras	*1*		
Loop Mode Configuration	*Closed*		
Glad-Hand Configuration	*90 degree elbows, 10" hoses, installed*		
Configuration Package 7 - Southeast District		**$ 49,346**	**$ 47,475**
Accssory Control Type	*Hardwired*		
Tarp Make & Model	*Aero Easy Cover*		
LED Warning Light Make	*Whelen*		
Spreader Controller Make & Model	*Force America 6100*		
Hydraulic Control Lever Type	*Manual Cable*		
Surface Temperature Sensor	*PreCise ARC Wireless*		
Backup Camera Make & Model	*ECCO EC7000-QM*		
Number of Rear Facing Cameras	*1*		
Loop Mode Configuration	*Closed*		
Glad-Hand Configuration	*90 degree elbows, 10" hoses, installed*		
MSRP Replacement Parts		**PTG of COMO 20% off List Price. Viking Cives 25%**	

Docusign Envelope ID: FFB00063-5087-8929-8067-CE06E5864C59

Tandem Axle Options Pricing		
Bidder Company Name	PREMIER TRUCK GROUP OF COLUMBIA	
	Option 1	Option 2
OPTION 1 HEATED WINDSHIELD	$ 491	$ 491
OPTION 2 ENGINE BRAKE	$ 49	$ 49
OPTION 3 ARCTIC FOX FUEL TANK HEATER	$ 977	$ 977
OPTION 4 INSTALL 50-WATT MODOT OWNED 2-WAY RADIO	$ 912	$ 400
OPTION 5 INSTALL 100-WATT MODOT OWNED 2-WAY RADIO	$ 912	$ 400
OPTION 6 CRASH ATTENUATOR WIRING- SL CMS	$ 1,936	$ 1,895
OPTION 7 CRASH ATTENUATOR WIRING- SL CMS AND AFAD	$ 2,158	$ 2,030
OPTION 8 CRASH ATTENUATOR WIRING- SW CMS, PANIC, HYD LIFT	$ 2,582	$ 2,415
OPTION 9 AUTOMATIC TIRE CHAINS	$ 4,053	$ 3,610
OPTION 10 RECEIVER PINTLE HITCH	$ 1,789	$ 975
OPTION 11 RECEIVER CHIPPER HITCH	$ 413	$ 760
OPTION 12 BOLT-ON CHIPPER HITCH	$ 1,064	$ 625
OPTION 13 INTEGRAL CHIPPER HITCH	$ 1,894	$ 795

Docusign Envelope ID: FFB00063-5087-8929-8067-CE06E5864C59

OPTION 14 PROTECTIVE FLOORBOARD LINING	$ 2,211	$ 1,550
OPTION 15 MOLDED FLOOR MATS	$ 145	$ 145
OPTION 16 CORTEN STEEL DUMP BODY	No Bid	$ (2,975)
OPTION 17 STAINLESS STEEL LONG SILLS	Standard	$ 1,350
OPTION 18 STRUCTURAL STEEL I-BEAM LONG SILLS	$ (2,954)	NO BID
OPTION 19 TOP RAIL FOR PROVIDED DUMP BODY	$ 2,088	$ 1,455
OPTION 20 AR400 TAILGATE SHEET	$ 399	$ 295
OPTION 21 SHOVEL TOOL BOX	$ 1,840	$ 1,700
OPTION 22 DUMP BODY SHAKER	$ 1,807	$ 1,295
OPTION 23 AUXILIARY HYDRAULIC ACCESSORY CIRCUIT	$ 2,578	$ 1,710
OPTION 24 ACCESSORY CIRCUIT HYDRAULIC HOSES TO FRONT OF DUMP TRUCK	$ 707	$ 698
OPTION 25 LED WARNING LIGHT SYSTEM CONTROL PANEL	$ 1,008	$ 656
OPTION 26 RIGHT-HAND MID-MOUNT WING SNOWPLOW	$ 15,863	$ 14,950
OPTION 27 LEFT-HAND MID-MOUNT WING SNOWPLOW	$ 15,935	$ 14,950

Docusign Envelope ID: FFB00063-5087-8929-8067-CE06E5864C59

OPTION 28 UNDERBODY SCRAPER	$ 20,298	$ 17,847
OPTION 29 RIGHT-HAND FRONT-MOUNT HD 3-FUNCTION WING SNOWPLOW	$ 22,104	$ 22,890
OPTION 30 12-FOOT FRONT SNOWPLOW	$ 9,767	$ 9,575
OPTION 31 REMOVABLE BASE ANGLE FOR A 12-FOOT FRONT SNOWPLOW	$ 971	$ 745
OPTION 32 42-INCH MOLDBOARD HEIGHT FOR A 12-FOOT FRONT SNOWPLOW	$ 169	$ 755
OPTION 33 JOMA CUTTING EDGE SYSTEM FOR A 12-FOOT FRONT SNOWPLOW	$ 6,118	$ 6,815
OPTION 34 14-FOOT FRONT SNOWPLOW	$ 11,694	$ 11,618
OPTION 35 REMOVABLE BASE ANGLE FOR A 14-FOOT FRONT SNOWPLOW	$ 1,432	$ 780
OPTION 36 42-INCH MOLDBOARD HEIGHT FOR A 14-FOOT FRONT SNOWPLOW	$ 262	$ 795
OPTION 37 JOMA CUTTING EDGE SYSTEM FOR A 14-FOOT FRONT SNOWPLOW	$ 8,884	$ 7,695
OPTION 38 16-FOOT DRAG CHAIN SPREADER WITH STAND	$ 27,958	$ 27,987

Docusign Envelope ID: FFB00063-5087-8929-8067-CE06E5864C59

OPTION 39 DRAG CHAIN CROSSBARS WELDED TO EVERY CHAIN LINK	$ 414	$ 2,032
OPTION 40 16-FOOT SINGLE AUGER SPREADER WITH STAND	$ 29,134	$ 29,855
OPTION 41 16-FOOT DUAL AUGER SPREADER WITH STAND	$ 32,125	$ 33,670
OPTION 42 FEEDER DRIVE FEEDBACK SENSOR ON THE OPTIONED SPREADER	$ 365	$ 365
OPTION 43 SIDE DEFLECTOR CURTAINS ON THE OPTIONED SPREADER	$ 1,132	$ 1,535
OPTION 44 LIQUID TANKS ON THE OPTIONED SPREADER	$ 3,120	$ 2,545
OPTION 45 GRANULAR PRE-WET SYSTEM	$ 9,503	$ 7,857
OPTION 46 ANTI-ICE SYSTEM	$ 4,652	$ 5,150
OPTION 47 DELETE BODY BUILDER INSTALLED COMPONENTS	$ (56,082)	$ (52,650)

Docusign Envelope ID: FFB00063-5087-8929-8067-CE06E5864C59

Towplow Axle Information	Body Builder's Company Name and Chassis Model Description			
Bidder Company Name	PREMIER TRUCK GROUP OF COLUMBIA			
Bidder Contact Name	MIKE TALLEUR			
Bidder Contact Email	MTALLEUR@PREMIERTRUCK.COM			
Bidder Contact Phone	573-303-7725			
	Option 1	Option 2	Option 3	Option 4
Chassis Model	WESTERN STAR 47X	N/A	N/A	N/A
Body Builder's Company Name	HENDERSON PRODUCTS	VIKING-CIVES	HENDERSON PRODUCTS	VIKING-CIVES
Base Bid Item: Towplow Axle Cab/Chassis Reference specification	$ 222,071	$ 216,979	$ 220,670	$ 215,578
Engine Make	DETROIT	DETROIT	CUMMINS	CUMMINS
Engine Model	DD13	DD13	X12	X12
Engine Horse Power	450	450	455	455
Engine Torque	1550 LB-FT	1550 LB-FT	1550 LB-FT	1550 LB-FT
Corrosion Proof Oil Pan	NA	NA	NA	NA
Stainless Steel Transmission Cooler, Lines	NA	NA	NA	NA
Configuration Package 1 - Northwest District	$ 48,290	$ 46,565	$ 48,290	$ 46,565
Accssory Control Type	*Hardwired*			
Tarp Make & Model	*Aero Easy Cover*			
LED Warning Light Make	*Whelen*			
Spreader Controller Make & Model	*Force America 5100EX*			
Hydraulic Control Lever Type	*Air*			
Surface Temperature Sensor	*Precise ARC Wireless*			
Backup Camera Make & Model	*ECCO EC7000-QM*			
Number of Rear Facing Cameras	*1*			
Loop Mode Configuration	*Closed*			
Glad-Hand Configuration	*90 degree elbows, 10" hoses, installed*			
Configuration Package 2 - Northeast District	$ 53,346	NO BID	$ 53,346	NO BID
Accssory Control Type	*Hardwired*			
Tarp Make & Model	*US Tarp/Unbreakable Arms*			
LED Warning Light Make	*Whelen*			
Spreader Controller Make & Model	*Bosch CS660*			
Hydraulic Control Lever Type	*Single Multifunction Joystick*			
Surface Temperature Sensor	*Roadwatch*			
Backup Camera Make & Model	*ECCO EC7000-QM*			

Docusign Envelope ID: FFB00063-5087-8929-8067-CE06E5864C59

Number of Rear Facing Cameras	*1*				
Loop Mode Configuration	*Closed*				
Glad-Hand Configuration	*90 degree elbows, 10" hoses, installed*				
Configuration Package 3 - Kansas City District		**$ 50,592**	**NO BID**	**$ 50,592**	**NO BID**
Accssory Control Type	*Hardwired*				
Tarp Make & Model	*US Tarp/Unbreakable Arms*				
LED Warning Light Make	*Whelen*				
Spreader Controller Make & Model	*Bosch CS660*				
Hydraulic Control Lever Type	*Air*				
Surface Temperature Sensor	*Roadwatch*				
Backup Camera Make & Model	*ECCO EC7000-QM*				
Number of Rear Facing Cameras	*1*				
Loop Mode Configuration	*Closed*				
Glad-Hand Configuration	*90 degree elbows, 10" hoses, installed*				
Configuration Package 4 - Central District		**$ 51,602**	**$ 50,589**	**$ 51,602**	**$ 50,589**
Accssory Control Type	*Multiplexed*				
Tarp Make & Model	*Aero Easy Cover*				
LED Warning Light Make	*Whelen*				
Spreader Controller Make & Model	*Force America 5100EX*				
Hydraulic Control Lever Type	*Individual Electric Joysticks*				
Surface Temperature Sensor	*PreCise ARC Wireless*				
Backup Camera Make & Model	*ECCO EC7000-QM*				
Number of Rear Facing Cameras	*2*				
Loop Mode Configuration	*Closed*				
Glad-Hand Configuration	*90 degree elbows, 10" hoses, installed*				
Configuration Package 5 - St. Louis District		**$ 54,331**	**$ 51,855**	**$ 54,331**	**$ 51,855**
Accssory Control Type	*Hardwired*				
Tarp Make & Model	*Shurco*				
LED Warning Light Make	*Noslo*				
Spreader Controller Make & Model	*Force America 6100*				
Hydraulic Control Lever Type	*Manual Cable*				
Surface Temperature Sensor	*PreCise ARC Wireless*				

Docusign Envelope ID: FFB00063-5087-8929-8067-CE06E5864C59

Backup Camera Make & Model	*ECCO EC7000-QM*				
Number of Rear Facing Cameras	*2*				
Loop Mode Configuration	*Closed*				
Glad-Hand Configuration	*90 degree elbows, 10" hoses, installed*				
Configuration Package 6 - Southwest District		**$ 48,794**	**$ 47,880**	**$ 48,794**	**$ 47,880**
Accssory Control Type	*Multiplexed*				
Tarp Make & Model	*Aero Easy Cover*				
LED Warning Light Make	*Whelen*				
Spreader Controller Make & Model	*Force America 5100EX*				
Hydraulic Control Lever Type	*Air*				
Surface Temperature Sensor	*PreCise ARC Wired*				
Backup Camera Make & Model	*ECCO EC7000-QM*				
Number of Rear Facing Cameras	*1*				
Loop Mode Configuration	*Closed*				
Glad-Hand Configuration	*90 degree elbows, 10" hoses, installed*				
Configuration Package 7 - Southeast District		**$ 50,614**	**$ 49,555**	**$ 50,614**	**$ 49,555**
Accssory Control Type	*Hardwired*				
Tarp Make & Model	*Aero Easy Cover*				
LED Warning Light Make	*Whelen*				
Spreader Controller Make & Model	*Force America 6100*				
Hydraulic Control Lever Type	*Manual Cable*				
Surface Temperature Sensor	*PreCise ARC Wireless*				
Backup Camera Make & Model	*ECCO EC7000-QM*				
Number of Rear Facing Cameras	*1*				
Loop Mode Configuration	*Closed*				
Glad-Hand Configuration	*90 degree elbows, 10" hoses, installed*				
MSRP Replacement Parts		**PTG of COMO 20% off List Price. Viking Cives 25%**			

Docusign Envelope ID: FFB00063-5087-8929-8067-CE06E5864C59

Towplow Options Pricing				
Bidder Company Name	PREMIER TRUCK GROUP OF COLUMBIA			
	Option 1	Option 2	Option 3	Option 4
OPTION 1 HEATED WINDSHIELD	$ 491	$ 491	$ 491	$ 491
OPTION 2 ENGINE BRAKE	$ 1,643	$ 1,643	$ 36	$ 36
OPTION 3 ARCTIC FOX FUEL TANK HEATER	$ 977	$ 977	$ 977	$ 977
OPTION 4 INSTALL 50-WATT MODOT OWNED 2-WAY RADIO	$ 912	$ 400	$ 912	$ 400
OPTION 5 INSTALL 100-WATT MODOT OWNED 2-WAY RADIO	$ 912	$ 400	$ 912	$ 400
OPTION 6 CRASH ATTENUATOR WIRING- SL CMS	$ 1,936	$ 1,895	$ 1,936	$ 1,895
OPTION 7 CRASH ATTENUATOR WIRING- SL CMS AND AFAD	$ 2,158	$ 2,030	$ 2,158	$ 2,030
OPTION 8 CRASH ATTENUATOR WIRING- SW CMS, PANIC, HYD LIFT	$ 2,582	$ 2,415	$ 2,582	$ 2,415
OPTION 9 AUTOMATIC TIRE CHAINS	$ 4,053	$ 3,610	$ 4,053	$ 3,610
OPTION 10 RECEIVER PINTLE HITCH	$ 1,789	$ 975	$ 1,789	$ 975
OPTION 11 RECEIVER CHIPPER HITCH	$ 413	$ 760	$ 413	$ 760
OPTION 12 BOLT-ON CHIPPER HITCH	$ 1,064	$ 625	$ 1,064	$ 625
OPTION 13 INTEGRAL CHIPPER HITCH	$ 1,894	$ 795	$ 1,894	$ 795
OPTION 14 PROTECTIVE FLOORBOARD LINING	$ 2,211	$ 1,550	$ 2,211	$ 1,550
OPTION 15 MOLDED FLOOR MATS	$ 145	$ 145	$ 145	$ 145
OPTION 16 CORTEN STEEL DUMP BODY	No Bid	$ (2,975)	No Bid	$ (2,975)
OPTION 17 STAINLESS STEEL LONG SILLS	Standard	$ 1,350	Standard	$ 1,350
OPTION 18 STRUCTURAL STEEL I-BEAM LONG SILLS	$ (2,954)	No Bid	$ (2,954)	No Bid

OPTION 19 TOP RAIL FOR PROVIDED DUMP BODY	$ 2,088	$ 1,455	$ 2,088	$ 1,455
OPTION 20 AR400 TAILGATE SHEET	$ 399	$ 295	$ 399	$ 295
OPTION 21 SHOVEL TOOL BOX	$ 1,840	$ 1,700	$ 1,840	$ 1,700
OPTION 22 DUMP BODY SHAKER	$ 1,807	$ 1,295	$ 1,807	$ 1,295
OPTION 23 AUXILIARY HYDRAULIC ACCESSORY CIRCUIT	$ 2,578	$ 1,710	$ 2,578	$ 1,710
OPTION 24 ACCESSORY CIRCUIT HYDRAULIC HOSES TO FRONT OF DUMP TRUCK	$ 707	$ 698	$ 707	$ 698
OPTION 25 LED WARNING LIGHT SYSTEM CONTROL PANEL	$ 1,008	$ 656	$ 1,008	$ 656
OPTION 26 RIGHT-HAND MID-MOUNT WING SNOWPLOW	$ 15,863	$ 14,950	$ 15,863	$ 14,950
OPTION 27 LEFT-HAND MID-MOUNT WING SNOWPLOW	$ 15,935	$ 14,950	$ 15,935	$ 14,950
OPTION 28 UNDERBODY SCRAPER	$ 21,017	$ 18,566	$ 21,017	$ 18,566
	Option 28: ONLY ALLOWS A MAXIMUM FUEL TANK SIZE OF 90 GAL			
OPTION 29 RIGHT-HAND FRONT-MOUNT HD 3-FUNCTION WING SNOWPLOW	$ 22,104	$ 22,890	$ 22,104	$ 22,890
OPTION 30 12-FOOT FRONT SNOWPLOW	$ 9,767	$ 9,575	$ 9,767	$ 9,575
OPTION 31 REMOVABLE BASE ANGLE FOR A 12-FOOT FRONT SNOWPLOW	$ 971	$ 745	$ 971	$ 745
OPTION 32 42-INCH MOLDBOARD HEIGHT FOR A 12-FOOT FRONT SNOWPLOW	$ 168	$ 755	$ 168	$ 755

Docusign Envelope ID: FFB00063-5087-8929-8067-CE06E5864C59

OPTION 33 JOMA CUTTING EDGE SYSTEM FOR A 12-FOOT FRONT SNOWPLOW	$ 6,118	$ 6,815	$ 6,118	$ 6,815
OPTION 34 14-FOOT FRONT SNOWPLOW	$ 11,694	$ 11,618	$ 11,694	$ 11,618
OPTION 35 REMOVABLE BASE ANGLE FOR A 14-FOOT FRONT SNOWPLOW	$ 1,432	$ 780	$ 1,432	$ 780
OPTION 36 42-INCH MOLDBOARD HEIGHT FOR A 14-FOOT FRONT SNOWPLOW	$ 262	$ 795	$ 262	$ 795
OPTION 37 JOMA CUTTING EDGE SYSTEM FOR A 14-FOOT FRONT SNOWPLOW	$ 8,884	$ 7,695	$ 8,884	$ 7,695
OPTION 38 16-FOOT DRAG CHAIN SPREADER WITH STAND	$ 27,958	$ 27,287	$ 27,958	$ 27,287
OPTION 39 DRAG CHAIN CROSSBARS WELDED TO EVERY CHAIN LINK	$ 414	$ 2,032	$ 414	$ 2,032
OPTION 40 16-FOOT SINGLE AUGER SPREADER WITH STAND	$ 29,134	$ 28,455	$ 29,134	$ 28,455
OPTION 41 16-FOOT DUAL AUGER SPREADER WITH STAND	$ 32,125	$ 32,470	$ 32,125	$ 32,470
OPTION 42 FEEDER DRIVE FEEDBACK SENSOR ON THE OPTIONED SPREADER	$ 365	$ 325	$ 365	$ 325
OPTION 43 SIDE DEFLECTOR CURTAINS ON THE OPTIONED SPREADER	$ 1,132	$ 1,820	$ 1,132	$ 1,820
OPTION 44 LIQUID TANKS ON THE OPTIONED SPREADER	$ 3,120	$ 2,545	$ 3,120	$ 2,545
OPTION 45 Y-CHUTE ON THE OPTIONED SPREADER	$ (648)	$ 795	$ (648)	$ 795
OPTION 46 GRANULAR PRE-WET SYSTEM	$ 9,503	$ 7,857	$ 9,503	$ 7,857

Docusign Envelope ID: FFB00063-5087-8929-8067-CE06E5864C59

OPTION 47 ANTI-ICE SYSTEM	$ 4,652	$ 5,150	$ 4,652	$ 5,150
OPTION 48 DELETE BODY BUILDER INSTALLED COMPONENTS	$ (57,742)	$ (52,650)	$ (57,742)	$ (52,650)

docusign

Certificate Of Completion

Envelope Id: AD7AC404-C026-48DC-8E36-E2D1037CB20F
Status: Completed
Subject: Complete with DocuSign: 2026-01-89220.pdf
Source Envelope:
Document Pages: 69
Signatures: 4
Certificate Pages: 6
Initials: 0
AutoNav: Enabled
EnvelopeId Stamping: Enabled
Time Zone: (UTC-06:00) Central Time (US & Canada)

Envelope Originator:
Ashten M. Lorts
1860 Michael Faraday Drive
Suite 100
Reston, VA 20190
Ashten.Lorts@modot.mo.gov
IP Address: 168.166.80.221

Record Tracking

Status: Original
2/24/2026 12:43:41 PM

Holder: Ashten M. Lorts
Ashten.Lorts@modot.mo.gov

Location: DocuSign

Signer Events	Signature	Timestamp
MIke Talleur mtalleur@premiertruck.com SALESMAN Security Level: Email, Account Authentication (Optional), Authentication, Logged in	Signed by: Mike Talleur 3F9E0FCE885740E... Signature Adoption: Pre-selected Style Using IP Address: 63.78.144.98	Sent: 2/24/2026 12:48:58 PM Viewed: 2/25/2026 10:03:43 AM Signed: 3/3/2026 8:41:03 AM

Authentication Details
SMS Auth:
Transaction: 7d86254f-920b-4b87-a6a3-28dd7d2de1b0
Result: passed
Vendor ID: TeleSign
Type: SMSAuth
Performed: 2/25/2026 10:03:35 AM
Phone: +1 573-303-7725

SMS Auth:
Transaction: 0745a12a-9ff1-4a5a-ad91-da557f6c2a54
Result: passed
Vendor ID: TeleSign
Type: SMSAuth
Performed: 3/3/2026 8:38:56 AM
Phone: +1 573-303-7725

Electronic Record and Signature Disclosure:
Accepted: 2/25/2026 10:03:43 AM
ID: 157a2832-6b91-460f-9605-ba29d47de921

Jason D. Saey Jason.Saey@modot.mo.gov Assistant Chief Counsel - Project Development Missouri Department of Transportation Security Level: Email, Account Authentication (Optional), Logged in	DocuSigned by: Jason D. Saey 8183FA5D71B4415... Signature Adoption: Pre-selected Style Using IP Address: 168.166.80.221	Sent: 3/3/2026 8:41:05 AM Viewed: 3/3/2026 8:49:22 AM Signed: 3/3/2026 8:49:41 AM

Electronic Record and Signature Disclosure:
Not Offered via Docusign

Brenda J. Morris Brenda.Morris@modot.mo.gov Chief Financial Officer Missouri Department of Transportation Security Level: Email, Account Authentication (Optional), Logged in	DocuSigned by: Brenda J. Morris 560EEE380ADC47C... Signature Adoption: Pre-selected Style Using IP Address: 168.166.80.221	Sent: 3/3/2026 8:49:43 AM Viewed: 3/3/2026 9:42:12 AM Signed: 3/3/2026 9:42:28 AM

Electronic Record and Signature Disclosure:

Signer Events	Signature	Timestamp
Not Offered via Docusign		
Jennifer Jorgensen jennifer.jorgensen@modot.mo.gov Secretary to the Commission MoDOT Security Level: Email, Account Authentication (Optional) **Electronic Record and Signature Disclosure:** Accepted: 6/7/2023 9:45:35 AM ID: 43e1faf8-03d4-4d0e-95b0-9dcba940a033	DocuSigned by: 7467BCDEFDFD4DE... Signature Adoption: Uploaded Signature Image Using IP Address: 168.166.80.221	Sent: 3/3/2026 9:42:30 AM Viewed: 3/3/2026 9:45:50 AM Signed: 3/3/2026 9:46:31 AM

In Person Signer Events	Signature	Timestamp

Editor Delivery Events	Status	Timestamp

Agent Delivery Events	Status	Timestamp

Intermediary Delivery Events	Status	Timestamp

Certified Delivery Events	Status	Timestamp

Carbon Copy Events	Status	Timestamp
Dana L. Kaiser Dana.Kaiser@modot.mo.gov Senior Executive Assistant Missouri Department of Transportation Security Level: Email, Account Authentication (Optional) **Electronic Record and Signature Disclosure:** Not Offered via Docusign	COPIED	Sent: 3/3/2026 8:49:44 AM
Tara Herx tara.herx@modot.mo.gov Senior Executive Assistant Missouri Department of Transportation Security Level: Email, Account Authentication (Optional) **Electronic Record and Signature Disclosure:** Not Offered via Docusign	COPIED	Sent: 3/3/2026 8:49:44 AM
Betty Wood betty.wood@modot.mo.gov Security Level: Email, Account Authentication (Optional) **Electronic Record and Signature Disclosure:** Not Offered via Docusign	COPIED	Sent: 3/3/2026 9:42:30 AM
Lisa Gerling lisa.gerling@modot.mo.gov Executive Assistant Security Level: Email, Account Authentication (Optional) **Electronic Record and Signature Disclosure:** Not Offered via Docusign	COPIED	Sent: 3/3/2026 9:42:30 AM

Witness Events	Signature	Timestamp

Notary Events	Signature	Timestamp

Envelope Summary Events	Status	Timestamps
Envelope Sent	Hashed/Encrypted	2/24/2026 12:48:58 PM
Certified Delivered	Security Checked	3/3/2026 9:45:50 AM
Signing Complete	Security Checked	3/3/2026 9:46:31 AM
Completed	Security Checked	3/3/2026 9:46:31 AM

Payment Events	Status	Timestamps

Electronic Record and Signature Disclosure

Missouri Highways and Transportation Commission
DocuSign, Inc. Express Electronic Signature Agreement

The Missouri Highways and Transportation Commission (hereinafter, Commission), acting by and through the Missouri Department of Transportation (MoDOT) is willing to provide to the Authorized Representative of the Contractor/Vendor/Consultant (Entity) who is duly authorized to act on behalf of said Entity (hereinafter you or I) and accept from you your electronically affixed authorized signature and seal, as required to validate a binding agreement between the Commission and the Entity, on all Commission/MoDOT documents, including but not limited to disclosures, agreements, contracts, notices, purchase orders, change orders, modifications, amendments, supplements, correspondence, and the like, (hereinafter, Commission Documents) that are processed, generated, and exchanged by and between the Commission and you, acting on behalf of the Entity, electronically through the utilization of the DocuSign, Inc. Express (DocuSign) eSignature Application. In consideration of mutual covenants, you agree as follows:

1) You are the person duly authorized and designated by the Entity to receive, access and agree to the terms of this agreement on behalf of the Entity by clicking the Agree button below.

2) You have the authority to specifically consent and agree that the Commission, in its discretion, provide all disclosures, agreements, contracts, notices, purchase orders, change orders, modifications, amendments, supplements, correspondence, and all other evidence of the transaction between the Commission and the Entity electronically (hereinafter all such documentation is referred to as electronic record(s)).

3) The email address, User ID and password authorized to access the electronic agreement via DocuSign are your own and are not shared with any other person.

4) All of the required notices and disclosures will be sent to the email address authorized through DocuSign.

5) You are duly authorized to receive electronically through DocuSign, access and act upon all electronic records, to provide all required information and electronically affix your signature and seal, as applicable, on behalf of the Entity named in such Commission Documents via DocuSign,.

6) The system through which you are accessing DocuSign and its eSignature Application meets the minimum requirements to access DocuSign, view, receive, retrieve, download, print, store, send and transmit all electronic records and any and all other communications sent to you from the Commission through the DocuSign web site.

7) All communications in electronic format from the Commission to you through DocuSign are considered in-writing. You have the ability to download and print any documents processed through DocuSign for 30 calendar days after such documents are first sent, as long as you are an authorized user of the DocuSign system. After such time, you may request copies by contacting the Commission through the Secretary to the Commission at mhtc@modot.mo.gov or by telephone at 573-751-2824. You shall print or download for your records a copy of any communication that is important to you to retain.

8) You have implemented appropriate security measures to ensure that only you have access through DocuSign to receive, access and electronically affix signatures to electronic records, as applicable, Commission/MoDOT sends to you through DocuSign. It is your sole responsibility to ensure your adequate protection, confidentiality and secrecy of the DocuSign Authentication Code, and any other user ID and/or Password combinations that may be required for you to access the DocuSign eSignature services and any disclosure thereof to any other person or

Docusign Envelope ID: FFB00063-5087-8929-8067-CE06E5864C59

communication thereof through unsecure medium, such as traditional electronic mail, shall be entirely at your risk. You shall be liable for any unauthorized usage of your ID/Password combination and the DocuSign Authentication Code.

9) You agree and authorize the Commission to respond to and act upon any and all transactions initiated and transmitted by you electronically through DocuSign. Any transaction initiated and transmitted by you to the Commission through DocuSign and its eSignature application shall be deemed to have been authorized by you, and the Commission is entitled to assume that the said transactions are so authorized by you and the Commission shall be protected upon acting thereon.

10) You shall be fully liable to the Commission for every transaction entered into using a valid DocuSign Authentication Code sent to you through certified mail, telephone call or Short Message Service (SMS) text, with or without your knowledge. In no event will the Commission be liable to you for any special, direct, indirect, consequential or incidental loss or damages even if you have advised the Commission/MoDOT of such possibility. The Commission shall not be liable for any misuse, if any, of any data placed on the internet by third parties hacking or accessing the application and hosting server without authorization.

11) The Entity shall take responsibility for all the transactions with the Commission conducted electronically through DocuSign and will abide by the record of the transactions generated by DocuSign or by the Commission/MoDOT through DocuSign. Further such record of transactions shall be conclusive proof and binding for all purposes and may be used as conclusive evidence in any proceedings. All records of the Commission and DocuSign, whether in electronic form, magnetic medium, documents or any other form, with respect to electronic transactions sent or received through use of DocuSign shall be conclusive evidence of such transactions and shall be binding on the Entity.

12) The Commission/MoDOT shall not be liable for any loss or damage whatsoever caused, arising directly or indirectly, in connection with the services and /or this Agreement, including without limitation any: (A) Loss of data; and (B) Interruption or stoppages to your access to DocuSign and its eSignature application and/or processing of electronic transactions due to any operational or technical difficulties/reason beyond our control for any other reason. The Commission, along with its members, employees, agents, executors, successors and assigns shall not be liable for any damages or claims or injuries arising out of or in connection with the use of DocuSign and its eSignature application or its non-use including non-availability or failure of performance, loss or corruption of data, loss of or damage to property (including profit and goodwill), work stoppage, computer failure or malfunctioning or interruption of business, error, omission, deletion, defect, delay in operation or transmission, communication line failure or for any failure to act upon electronic transaction for any cause.

13) You shall keep confidential all information, in whatever form, produced, prepared, observed or received by you to the extent that such information is confidential by law or otherwise required by the Commission.

14) This Agreement and the rights and obligations of the parties hereto shall be governed by, and construed according to, the laws of the State of Missouri. It is agreed by the parties that any action at law, suit in equity, or other judicial proceeding to enforce or construe this Agreement, or regarding its alleged breach, shall be instituted only in the Circuit Court of Cole County, Missouri.

15) The terms of this agreement and any amendments thereafter shall remain in full force and effect for as long as DocuSign is active, or by thirty (30) days written notification by either party

Docusign Envelope ID: FFB00063-5087-8929-8067-CE06E5864C59

of their intent to cancel this agreement.

By checking the I Agree button, I confirm that:

1. I am the person named in the documents to which I will electronically affix my signature; that I am authorized to sign such documents on behalf of the Entity named in the documents; that I will read and know the contents of such electronically signed documents including all exhibits attached thereto, and that the statements made therein are true, and that I will not omit any information needed to make such documents true; and that I will take appropriate security measures to insure that I have sole access to the documents sent to me by the Commission and MoDOT through the email address provided on DocuSign.
2. I and the Entity shall indemnify and save harmless the Commission, its members, employees, officers, successors, assigns, agents and representatives against any and all claims, losses, damages, costs, liabilities and expense actually incurred, suffered or paid by the Commission, its members, employees, officers, successors, assigns, agents and representatives, directly or indirectly, and also against all demands, actions, suits, proceedings made, filed, instituted against the Commission, its members, employees, officers, successors, agents and representatives in connection with, or arising out of, or relating to the Commission accepting and acting or not accepting and not acting for any reason whatsoever pursuant to, in accordance with or relying upon, data received, through DocuSign and its eSignature application you or any unauthorized use of your ID/Password combination, the DocuSign Authentication Code, or the DocuSign eSignature application.
3. I agree to the DocuSign, Inc. Express (DocuSign) Electronic Signature Agreement terms and conditions outlined above.

372-2026

CERTIFIED COPY OF ORDER

July Session of the July Adjourned 26

STATE OF MISSOURI } **ea.** **Term. 20**

County of Boone

In the County Commission of said county, on the 28th **day of** July **20** 26

the following, among other proceedings, were had, viz:

Now on this day the County Commission of the County of Boone does hereby approve a Contract Amendment to contract C000016 (bid # 03-13APR17) with Superion LLC, n/k/a CentralSquare Tehnologies, LLC for ERP System Selection Project. The terms of the contract amendment are set out in the attached contract amendment, and the Presiding Commissioner is authorized to sign the same.

Done this 28th day of July 2026.

Kip Kendrick
Presiding Commissioner

Justin Aldred
District I Commissioner

Janet M. Thompson
District II Commissioner

ATTEST:

Brianna L Lennon SEU
Brianna L. Lennon
Clerk of the County Commission

Boone County Purchasing

Melinda Bobbitt, CPPO
Director of Purchasing

5551 S. Tom Bass Road
Columbia, MO 65201
Phone: (573) 886-4391

MEMORANDUM

TO: Boone County Commission
FROM: Melinda Bobbitt, CPPB, CPPO
DATE: June 23, 2026
RE: Amendment #18 to Contract C000016 (bid # *03-13APR17) - ERP System Selection Project* with Superion LLC, n/k/a CentralSquare Technologies, LLC

Contract *C000016 (bid #03-13APR17) - ERP System Selection Project* was approved by commission for award to Superion, LLC, n/k/a CentralSquare Technologies, LLC on July 25, 2019, commission order 308-2019.

Amendment #18 adds two timeclocks for a total of $10,918. This includes hardware, software, and first year of subscription fee from department/account as follows:

- Department 4131– LE Training Center Construction, account 71231 – Owner Costs.
- Department 2708 – 911/EM IT Hardware & Software – accounts 91301 - Computer Hardware, 70100 – Software Subscriptions, 60051 – IT Equipment Service Contract.

cc: Julia Lutz, Kari Hoehne, Victoria Walter - IT / Contract File

06/15/26

RQST DATE

PURCHASE REQUISITION
BOONE COUNTY, MISSOURI

4861 — VNDR #

Central Square (Superion) — VENDOR NAME

03-13APR17 — BID #

Ship to Dept #: 1172

Bill to Dept #: 1172

Dept	Account	Item Description	Qty	Unit Price	Amount
4131	71231	IntelliTime Timeclock - Hardware & Services	1	$5,000.00	$5,000.00
4131	71231	IntelliTime Timeclock - Software	1	$224.00	$224.00
4131	71231	IntelliTime Timeclock - Year 1 Maintenance	1	$235.00	$235.00
2708	91301	IntelliTime Timeclock - Hardware & Services	1	$5,000.00	$5,000.00
2708	70100	IntelliTime Timeclock - Software	1	$224.00	$224.00
2708	60051	IntelliTime Timeclock - Year 1 Maintenance	1	$235.00	$235.00
					$0.00
		Quote: Q-262052 from Amendment #18			$0.00
		Boone County Early Learning Center			$0.00
		2026 Budget Item:730.011-140 - County Backup			$0.00
					$0.00
					$0.00
					$0.00
					$0.00
					$0.00
					$0.00
					$0.00
				GRAND TOTAL:	10,918.00

I certify that the goods, services or charges above specified are necessary for the use of this department, are solely for the benefit of the county, and have been procured in accordance with statutory bidding requirements.

Elizabeth M. Boos
Approving Official

Victoria Walter
Prepared By

Auditor Approval

Melinda Bobbitt

From: Melinda Bobbitt
Sent: Tuesday, June 23, 2026 11:32 AM
To: Kari Hoehne
Cc: Aaron Neugarten
Subject: RE: Amendment request (CST Amendment #18) - 2 Timeclocks (PSCC and Backup)

Kari - I 'm completely confused now. Where will the backup be located? I need to get my commission memo right before I load the amendment in DocuSign.

Aaron - the Purchase Requisition is signed by Beth Boos. Is she authorized to sign on account 4131 – Childcare Center Construction or do I need to get Commissioner's Kendrick's signature on it too?

And how much is budgeted for these two timeclocks?

Thanks,
Melinda

From: Kari Hoehne <KHoehne@boonemo.gov>
Sent: Tuesday, June 23, 2026 11:24 AM
To: Melinda Bobbitt <MBobbitt@boonemo.gov>
Cc: Aaron Neugarten <ANeugarten@boonemo.gov>
Subject: RE: Amendment request (CST Amendment #18) - 2 Timeclocks (PSCC and Backup)

Attached is the latest.
The back up is not for the PSCC... this is 2026 Budget Item:730.011-140 - County Backup 😊

Thanks!
Kari

*** Please note my new email address*

Kari Hoehne, PMP • *Project Manager*
Boone County Government, Missouri
Information Technology Department
801 E Walnut, Room 220, Columbia MO 65201
Phone: 573.886.7231
Email: KHoehne@boonemo.gov

From: Aaron Neugarten <ANeugarten@boonemo.gov>
Sent: Tuesday, June 23, 2026 11:22 AM
To: Melinda Bobbitt <MBobbitt@boonemo.gov>
Cc: Kari Hoehne <KHoehne@boonemo.gov>
Subject: RE: Amendment request (CST Amendment #18) - 2 Timeclocks (PSCC and Backup)

Limited Liability Company Details as of 6/24/2026

Required Field *

To File Documents - select the filing from the "Create Filing" list, then click FILE ONLINE.

To terminate an entity two documents are required:

General Business and Nonprofit - Articles of Dissolution followed by Articles of Termination

Limited Liability Companies - Notice of Winding up followed by Articles of Termination

File Registration Reports - click FILE REGISTRATION REPORT.

Copies or Certificates - click ORDER COPIES/CERTIFICATES.

RETURN TO SEARCH RESULTS

Create Filing

Amended Certificate of Registration of a Foreign LLC

FILE ONLINE

ORDER COPIES/ CERTIFICATES

General Information | Filings | Principal Office Address

Name	CENTRALSQUARE TECHNOLOGIES, LLC	Principal Office Address	
Type	Limited Liability Company	Charter No.	FL001426989
Domesticity	Foreign	Home State	DE
Registered Agent	CSC-LAWYERS INCORPORATING SERVICE COMPANY 221 BOLIVAR ST JEFFERSON CITY, MO 65101	Status	Active
Date Formed	2/13/2019		
Duration	Perpetual		

The information contained on this page is provided as a public service, and may change at any time. The State, its employees, contractors, subcontractors or their employees do not make any warranty, expressed or implied, or assume any legal liability for the accuracy, completeness or usefulness of any information, apparatus, product or process disclosed or represent that its use would not infringe on privately-owned rights.

An official website of the United States government Here's how you know

Subcontracting Plan Reporting system issues resolved Show Details
Jun 10, 2026

Revolutionary FAR Overhaul Impacts to SAM.gov Show Details
Aug 15, 2025

See All Alerts

SAM.GOV®

Home Search Data Bank Data Services Help

Search

All Words e.g. 1606N020Q02

Filter By

Keyword Search

For more information on how to use our keyword search, visit our help guide

Simple Search | **Search Editor**

- Any Words
- All Words
- Exact Phrase

e.g. 123456789, Smith Corp

Classification

Excluded Individual

Excluded Entity

Entity Name

e.g. ABC Inc

centralsquare ×

Unique Entity ID

e.g. HTYR9YJHK65L

CAGE / NCAGE

Enter CAGE/NCAGE Code

Federal Organizations

Exclusion Type

Exclusion Program

Location

Dates

Reset

Entity Information ^ | All Entity Information | Entities | Disaster Response Registry | Responsibility / Qu

No matches found

We couldn't find a match for your search criteria.

Please try another search or go back to previous results.

Go Back

Docusign Envelope ID: D3948026-4BB7-8B9D-8112-5AA8163B73D1

Commission Order #: 372-2026 Date: 07/28/2026

CONTRACT AMENDMENT NUMBER 18
ERP SYSTEM SELECTION PROJECT

The Purchase Agreement for ERP System Selection Project (the "Agreement") **C000016 (03-13APR17)** dated the 25th day of July 2019 made by and between Boone County, Missouri and **Superion, LLC, n/d/a CentralSquare Technologies, LLC** for and in consideration of the performance of the respective obligations of the parties set forth herein, is amended as follows:

I. Add Time Clocks and Service per quote Q-262052 for the Boone County Early Learning Center as follows:

SOFTWARE INCLUDED:

Product Name	Qty.	Unit Price	Total
1. IntelliTime Per Time Clock-Interface Program (2400-s) Support Annual Subscription Fee	2	$99.00	$198.00
2. IntelliTime Time Clock Interface Application Subscription Fee Per Time Clock (3400) Annual Subscription Fee	2	$125.00	$250.00

SERVICES INCLUDED:

Description	Total
1. IntelliTime Professional Support Hour Budgeting – Fixed Fee	$3,630.00
2. Public Administration Project Management Services – Fixed Fee	$780.00

HARDWARE INCLUDED:

Product Name	Qty.	Unit Price	Total
1. IntelliTime Touch Time III Time Clock Proximity Sensor (8011) One Time Fee	2	$2,795.00	$5,590.00

TOTAL	**$10,918.00**
First Year Maintenance Total	**$470.00**
First Year Subscription Total	**$448.00**
First Year Recurring Services Total	**$0.00**

Except as specifically amended hereunder, all other terms, conditions, provisions and prices of the original agreement shall remain in full force and effect.

Docusign Envelope ID: D3948026-4BB7-8B9D-8112-5AA8163B73D1

IN WITNESS WHEREOF the parties through their duly authorized representatives have executed this agreement on the day and year first above written.

SUPERION, LLC
n/d/a CENTRALSQUARE TECHNOLOGIES, LLC

DocuSigned by:
Ronald Anderson
D0E45FA2938A4EB...

by _____

title Chief Revenue Officer

BOONE COUNTY, MISSOURI
by: Boone County Commission

Signed by:
Kip Kendrick
2B83ECDD7F6E4A6...

Kip Kendrick, Presiding Commissioner

APPROVED AS TO FORM:

DocuSigned by:
7D71DEAEB9D74DD...

CJ Dykhouse, County Counselor

ATTEST:

Signed by:
Brianna L. Lennon
242B827B32F14BF...

Brianna L. Lennon, County Clerk

AUDITOR CERTIFICATION:
In accordance with RSMo 50.660, I hereby certify that a sufficient unencumbered appropriation balance exists and is available to satisfy the obligation(s) arising from this contract. (Note: Certification of this contract is not required if the terms of this contract do not create a measurable county obligation at this time.)

Signature	Date	Appropriation Account
DocuSigned by: Kyle Rieman by AW. 8E8FE1148A274E1...	7/14/2026	4131-71231 / $5,459; 2708-91301 / $5,000; 2708-70100 / $224; 2708-60051 / $235

Docusign Envelope ID: D3948026-4BB7-8B9D-8112-5AA8163B73D1

CENTRALSQUARE®

Quote prepared on:
May 12, 2026
Quote prepared by:
Baxley Harvey
baxley.harvey@centralsquare.com

Change Order

Quote #: Q-262052
Primary Quoted Solution: Finance Enterprise
Quote expires on: November 08, 2026
Change Order in reference to: Q-46237

Quote prepared for:
Kari Hoehne
Boone County
801 E. Walnut St., Rm 220
Columbia, Missouri 65201
573-886-7204

Thank you for your interest in CentralSquare. CentralSquare provides software that powers over 8,000 communities. More about our products can be found at www.centralsquare.com.

WHAT SOFTWARE IS INCLUDED?

In Process

	PRODUCT NAME	QUANTITY	UNIT PRICE	TOTAL
1.	IntelliTime Per Time Clock - Interface Program (2400-s) Support Annual Subscription Fee	2	99.00	198.00
2.	IntelliTime Time Clock Interface Application Subscription Fee Per Time Clock (3400) Annual Subscription Fee	2	125.00	250.00
			Software Total	448.00 USD

WHAT SERVICES ARE INCLUDED?

	DESCRIPTION	TOTAL
1.	IntelliTime Professional Support Hour Budgeting - Fixed Fee	3,630.00
2.	Public Administration Project Management Services - Fixed Fee	780.00
	Services Total	4,410.00 USD

WHAT HARDWARE IS INCLUDED?

	PRODUCT NAME	QUANTITY	UNIT PRICE	TOTAL
1.	IntelliTime Touch Time III Time Clock - Proximity Sensor (8011) One Time Fee	2	2,795.00	5,590.00

Docusign Envelope ID: D3948026-4BB7-8B9D-8112-5AA8163B73D1

CENTRALSQUARE®

Change Order

Quote prepared on:
May 12, 2026
Quote prepared by:
Baxley Harvey
baxley.harvey@centralsquare.com

Hardware Total	5,590.00 USD

QUOTE SUMMARY

Software Subtotal	448.00 USD
Services Subtotal	4,410.00 USD
Hardware Subtotal	5,590.00 USD
Quote Subtotal	10,918.00 USD
Quote Total	**10,918.00 USD**

In Process

Docusign Envelope ID: D3948026-4BB7-8B9D-8112-5AA8163B73D1

Quote prepared on:
May 12, 2026
Quote prepared by:
Baxley Harvey
baxley.harvey@centralsquare.com

Change Order

WHAT ARE THE RECURRING FEES?

TYPE	AMOUNT
FIRST YEAR MAINTENANCE TOTAL	470.00
FIRST YEAR SUBSCRIPTION TOTAL	448.00
FIRST YEAR RECURRING SERVICES TOTAL	0.00

The amount totals for Maintenance and/or Subscriptions on this quote include only the first year of software use and maintenance.

Annual Maintenance and Subscriptions renewals shall be due annually on the anniversary of the Delivery Date*. Annual Maintenance and Subscription Fees are subject to increase as outlined in the Master Agreement.

In Process

*Delivery: For on-premise software, Delivery shall be when CentralSquare delivers to Customer the initial copies of the software outlined above by whichever the following applies and occurs first (a) electronic delivery, by posting it on CentralSquare's network for downloading, or similar suitable electronic file transfer method, or (b) physical shipment, such as on a disc or other suitable media transfer method, or (c) installation, or (d) delivery of managed services server. Physical shipment is on FOB - Destination, and electronic delivery is at the time CentralSquare provides Customer with access to download the software. For cloud-based software Delivery shall be whichever the following applies and occurs first when Authorized Users have (a) received log-in access to the software or any module of the software or (b) received access to the software via a URL.

Subscription Access. If Customer is purchasing subscription software under this Quote, so long as Customer has paid the annual subscription fees and is current at all times with the subscription fees as stated herein, CentralSquare grants to Client a limited non-exclusive, non-transferable access to use the subscription software granted in this Quote. Customer understands and acknowledges no ownership or any form of intellectual property rights transfer under the terms of this Quote. Upon termination of this Quote or any subscriptions, (i) all rights granted herein shall terminate immediately and automatically upon the effective date of such termination; (ii) Customer's right to the accessed software granted herein shall terminate; and (iii) Customer will cease using such software and at CentralSquare's direction return or destroy the software and any supplemental confidential information or documentation. Customer shall maintain for a reasonable period, but in no event less than three (3) years after expiration or termination of this Quote, the systems, books and records necessary to accurately reflect compliance with software access and the use thereof. Upon request, and no more than once per year, Customer shall permit CentralSquare to audit Customer's use of the software to monitor compliance. If an audit reveals that Customer has exceeded the restrictions on use or non-compliance with this Quote, Customer shall be responsible for the prompt payment by Customer to CentralSquare of any underpayment.

BILLING INFORMATION

Fees will be payable within 30 days of invoicing.

Please note that the Unit Price shown above has been rounded to the nearest two decimal places for display purposes only. The actual price may include as many as five decimal places. For example, an actual price of $21.37656 will be shown as a

Docusign Envelope ID: D3948026-4BB7-8B9D-8112-5AA8163B73D1

Quote prepared on:
May 12, 2026
Quote prepared by:
Baxley Harvey
baxley.harvey@centralsquare.com

Change Order

Unit Price of $21.38. The Total for this quote has been calculated using the actual prices for the product and/or service, rather than the Unit Price displayed above.

Prices shown do not include any taxes that may apply. Any such taxes are the responsibility of Customer. This is not an invoice.

For customers based in the United States or Canada, any applicable taxes will be determined based on the laws and regulations of the taxing authority(ies) governing the "Ship To" location provided by Customer on the Quote Form.

PAYMENT TERMS

License Fees & Annual Subscriptions
- 100% Due Upon Execution

Contract Startup
- 100% Due Upon Execution

Hardware & Third-Party Software

- 100% Due Upon Receipt of Hardware

In Process

Services
- Fixed Fee: 100% Due Upon Completion of Services
- Time & Material: Due as Incurred

Third-Party Services
- Fixed Fee: 50% Due Upon Execution; 50% Due Upon Completion
- Time & Material: Due As Incurred

Travel & Living Expenses
- Due as Incurred

373-2026

CERTIFIED COPY OF ORDER

July Session of the July Adjourned 26

STATE OF MISSOURI } **ea.** **Term. 20**

County of Boone

In the County Commission of said county, on the 28th **day of** July **20** 26

the following, among other proceedings, were had, viz:

Now on this day the County Commission of the County of Boone does hereby appoint the following:

Bill Florea	Board of Adjustment	Appointment	7/28/2026 – 7/31/2027	Remainder of unexpired term

Done this 28th day of July 2026.

Kip Kendrick
Presiding Commissioner

Justin Aldred
District I Commissioner

Janet M. Thompson
District II Commissioner

ATTEST:

Brianna L. Lennon SEU
Brianna L. Lennon
Clerk of the County Commission

Kip Kendrick, Presiding Commissioner
Justin Aldred, District I Commissioner
Janet Thompson, District II Commissioner

Boone County Government Center
801 E. Walnut, Room 333
Columbia, MO 65201
573-886-4305 - FAX 573-886-4311
E-mail: commission@boonemo.gov

Boone County Commission

BOONE COUNTY BOARD OR COMMISSION APPLICATION FORM

Board or Commission: Board of Adjustment
Name: Bill Florea
Home Address: 4316 S Coats Lane
City: Columbia **Zip Code:** 65203
Business Address: _____
City: _____ **Zip Code:** _____
At which address would you prefer to be contacted? __
E-mail: bill.florea@gmail.com
Phone (Home): (573)999-2034 **Phone (Work):** _____ **Phone (Cell):** (573)999-2034
Fax: _____

Qualifications:
Over 30-years experience in planning, zoning, land development, building code administration, and environmental regulation administration.

Past Community Service:
Rainbow House Prepare and donate meals for up to 20 residents and staff. Youth/Young Adult Athletics Certified swim and dive official for USA Swimming, National Collegiate Athletic Association (NCAA), and Missouri State High School Activities Association (MSHSAA)

References:
Jay Gebhardt, A Civil Group, jay@acivilgroup.com Dr. Christian Lorson, University of Missouri: lorsonc@missouri.edu

I have no objections to the information in this application being made public. To the best of my knowledge at this time I can serve a full term if appointed. I do hereby certify that the above information is true and accurate.

_____
Applicant Signature

Return Application To:

Boone County Commission Office
Boone County Government Center
801 East Walnut, Room 333
Columbia, MO 65201
Fax: 573-886-4311

An Affirmative Action/Equal Opportunity Institution